Commission Meeting
Brookings City & County Government Center
520 3rd Street
Chambers, Suite 310 (3rd floor)

If you have any symptoms of COVID-19 or believe you may have been exposed, please consider watching the Commission meeting from home, broadcast live on Swiftel channel 19, ITC channel 168, or the Brookings County Youtube channel. You can also call in by dialing 605-697-8255 and entering code 6056968205 when prompted.

1. **8:30 AM Call to Order on Tuesday, August 4, 2020**

2. **Pledge of Allegiance**

3. **Invitation for a Citizen to schedule time on the Commission Agenda for an item not listed.**

   Anyone wanting to speak during this agenda item must sign in prior to the start of the meeting. Any requested action items must be scheduled for a future meeting date.

4. **Approval of Agenda**

   Action: Motion to Approve, Request Comments, Voice Vote

5. **Consent Agenda Items**

   Action: Motion to Approve, Note Consent Agenda Items, Request Comments, Roll Call

   A. Approval of minutes

      Documents:

      07-21-2020 Minutes.pdf

   B. Approval of travel requests

      Documents:

      Travel Requests.pdf

   C. Approval of personnel action notices

      Documents:

      Personnel Action Notice Report 20200804.pdf

   D. Approval of cellular authorizations

   E. Approval of the Human Services report

      Documents:

Human Services Report.pdf

6. **Routine Business**

A. Approval of claims

Action: Motion to Approve, Comments, Roll Call

Documents:

8.4.2020 CLAIMS.pdf
July Department of Revenue.pdf
August Cell Phones 8.4.2020.pdf

B. Department Head reports

i. Highway Department

Documents:

Highway Dept Report.pdf

7. **Scheduled Agenda Items**

A. 9:00 AM - Jackie Lanning: update on 20th Street South BUILD project.

Documents:

City Engineering Memo.pdf

i. Discussion and possible action on pavement type for the County's portion east of I-29 to 34th Avenue.

Action: Motion to Approve, Comments, Roll Call

8. **Regular Business**

A. Action to approve Agreement #20-41: an Easement for Use of County Road Right-of-Way made by Golden Dakota Farms, LLC in Parnell Township.

Action: Motion to Approve, Comments, Voice Vote

Documents:

Agr 20-41 Easement Parnell Twp.pdf

B. Action to approve Agreement #20-42: an Easement for Use of County Road Right-of-Way made by Golden Dakota Farms, LLC in Elkton Township.

Action: Motion to Approve, Comments, Voice Vote

Documents:

Agr 20-42 Easement Elkton Twp.pdf

C. Action to approve Agreement #20-43: an application for occupancy of right-of-way of county highways made by Sioux Valley Energy in Oslo Township.

Action: Motion to Approve, Comments, Voice Vote

Documents:

Agr 20-43 ROW Sioux Valley Energy.pdf

D. Action to approve a Request to Fill Vacancy for an Equipment Operator in the Highway Department.

Action: Motion to Approve, Comments, Voice Vote

Documents:

RFV - Equipment Operator.pdf

E. Action to declare items as surplus property to sell, transfer or destroy.

Documents:

Surplus List.pdf

9. Commission Department Director's Report

Documents:

Commission Dept Diretor Report.pdf
2020 County Convention.pdf
Reducing Impact of Substance Abuse and Mental Illness Conference.pdf
Mental Illness Informational Picnic.pdf
US14 Bypass Corridor Study Online Info Release.pdf

10. States Attorney's Office Report

11. Commissioner Reports and Discussion Items

A. Correspondence received

Documents:

SDML Election Notice.pdf
SDPAA Election Notice.pdf
Boys Girls Club Thank You.pdf
DENR to Norfeld Hutterian Brethren.pdf
DENR to Norfeld Hutterian Brethren.pdf
DENR to Richard Debra Ford Swine Operation - 2017 General Permit.pdf
DENR to Richard Debra Ford Swine Operation - State Gen Permit.pdf

12. Executive Session

Action: Motion to Enter Into Executive Session, Voice Vote
Action: Motion to Come Out of Executive Session, Voice Vote

13. Adjournment

Action: Motion to Approve, Voice Vote

14. Public Notices

- *August 3-6: Brookings County 4-H Achievement Days*
- *August 10, Monday: Brookings Empowerment Project Picnic. 5:30-7:30 p.m. Pioneer Park, Brookings*
- *August 13, Thursday: CDI Golf Outing at the Brookings Country Club*
- *September 7, Monday: County offices closed due to the Labor Day holiday.*
- *September 13-15: SDACC Fall Convention. Ramkota, Sioux Falls.*

NOTE: Individuals needing assistance, pursuant to the Americans with Disabilities Act, should contact Brookings County (605-696-8205) 48 hours in advance of the meeting to make necessary arrangements. The County of Brookings is responsive to requests for communication aids and the need to provide appropriate access and will provide alternative formats and accessible locations consistent with the Americans with Disabilities Act.

BROOKINGS COUNTY COMMISSION MEETING
TUESDAY, JULY 21, 2020

The Brookings County Board of County Commissioners met in regular session on Tuesday, July 21, 2020 with the following members present: Michael Bartley, Larry Jensen, Lee Ann Pierce, Angela Boersma and Ryan Krogman.

CALL TO ORDER

Chairperson Bartley called the meeting to order at 8:30 a.m.

PLEDGE OF ALLEGIANCE

The Pledge of Allegiance was recited.

APPROVAL OF AGENDA

Motion by Krogman, seconded by Jensen to approve the agenda for the July 21, 2020 Commission Meeting. All members voted "aye." Motion carried.

CONSENT AGENDA

Motion by Boersma, seconded by Krogman to approve the consent agenda. Roll call vote: Pierce "aye," Boersma "aye," Krogman "aye," Jensen "aye," Bartley "aye." Motion carried.

The consent agenda consisted of the minutes from the July 7, 2020 Commission Meeting.

Be it noted, the following excerpt was corrected in the approved minutes by the board from the published minutes of July 7, 2020: *Motion by Pierce, seconded by Krogman to amend the main motion and take out 'recently' in the second 'whereas' in the resolution. Pierce said Sourcewell went through the bidding process back in 2017 so they didn't "recently" go through it. Pierce asked what they will do about the warranty issue. She said she would like clarification. Krogman agreed and said there needs to be clarification. Pierce said there are three different interpretations on the warranty and when you are spending a lot of money they need clarification.*

Roll call vote on amendment: Boersma "aye," Krogman "aye," Jensen "aye," Pierce "aye," Bartley "aye." Amendment carried.

Motion by Krogman, seconded by Pierce to table action on the amended resolution until the July 21, 2020 meeting.

Roll call vote to table: Krogman "aye," Jensen "aye," Pierce "aye," Boersma "aye," Bartley "aye." Motion carried.

Travel Requests: Jacob Brehmer to attend an Ag Land Valuation Workshop on July 8, 2020 in Mitchell; Rae Lynn Maher to attend G0386: Mass Fatalities Incident Response on July 21st-22nd in Watertown.

Personnel Action Notices: Annual review- Greg Enz to $22.80; Termination- Keanu Phumipraphat, effective June 24, 2020; Annual review- Paul Ness to $21.06, effective July 1, 2020; Voluntary resignation- Samantha Williams, effective July 3, 2020; Status Change- Full-time

Correctional Officer Andrew Erickson at $19.08, effective July 4, 2020; New hire- Part-time Correctional Officer Faith VanMeveren at $18.34, effective July 7, 2020; Voluntary resignation- Cameron Smith, effective July 20, 2020; Annual review- Mitchell Lang to $19.46, effective August 1, 2020; Annual review- Alex Stuefen to $18.70, effective August 1, 2020; Annual review- Sally Tolley to $19.59, effective August 1, 2020.

Human Services Report: case #20-067 for rent was approved; case #19-112 for medical was approved.

ROUTINE BUSINESS

Approval of Claims

Motion by Boersma, seconded by Jensen to approve the following claims. Roll call vote: Boersma "aye," Krogman "aye," Jensen "aye," Pierce "aye," Bartley "aye." Motion carried.

A&B Business Inc, Copier Contract, $313.34; Agfirst Farmers Coop, Patrol Car Maintenance, $38.72; Allegra Print & Imaging, Envelopes, $244.30; Alphamedia USA LLC, Sales Blitz Package, $420.00; American Stamp & Marking, Self Inking Stamp, $33.43; Aragon, Martha A, Translation Services, $187.50; AT&T Mobility, July Bill, $400.40; Aurora Auto Body & Glass, Patrol Vehicle Fuel, $523.58; Avera Heart Hospital Of, Medical Rates, $77,676.76; Banner Associates, Design, Bidding, Constuction, $7,588.00; Bob Barker Company, Misc Jail Supplies, $5.77; Bobcat Of Brookings, Broom, $231.00; Bowes Construction, Asphalt/Basecourse, $17,701.73; Bremmon, Carmen, Court Translation Services, $1,550.00; Brookings City Utilities, Fire Alarm/Elev Phone/Fin/Emer, Telephone & Internet Services, BCOAC Irrigation, Water/Sewer/Electric/Telephone/Courthouse/1921BLDG/Comm Health, $6,942.75; Brookings City Utilities, Detention Utilities, Water For Truck Shed, $2,500.33; Brookings County Finance, Delinquent Taxes-Willmott, $335.70; Brookings Health System, July Bloody Alcohol Testing, Sane Kits, $6,185.75; Brookings Register, Publications, $1,116.08; Brookings-Deuel Rws, Water @ Bruce Shop, $20.00; Buhls Of Brookings Clean, Jail Supplies, Dust Mops/Rugs, $178.45; Butler Machinery Co, Kit Lining/Parts, $426.28; Carquest Auto, Supplies, $1,269.71; Century Business Product, Copier Contract, $143.54; Chs, Diesel-Bkgs/White/Sinai/Bruce, $6,791.81; Cintas Corporation, Supplies/Parts, $170.56; City Of Brookings, July Bills, $22,441.07; Compass Counseling & Ass, Psychosexual Assessment, $1,800.00; Concrete Materials Inc, Pea Rock, $20,943.02; Cook's Wastepaper & Recy, Highway Services, Courthouse&BCOAC Service, Detention Services, Single Stream Service, $832.48; Dakota Data Shred, Equipment Rental, $16.00; Dale's Alignment, Repairs And Tires On Trailer, $800.27; Dean Schaefer Court Repo, Mi Hearings Court Reporting, $69.00; Anthony Dempewolf, Jail Costs Reimbursement, $425.00; Diamond Mowers Inc, Parts, $2,941.72; Ecolab Pest Elimination, Pest Control-Jail, $87.87; Einspahr Auto Plaza, Patrol Vehicle Maint, $48.55; Election Systems & Softw, Activation Cards, $464.80; Empire Investments LLC, Tax Certificates, $6,075.50; Executive Mgmt Finance O, Microfilm Documents, $1,432.05; First Bank & Trust, July Charges, $2,458.78; Fite, Pierce & Ronning L, Court Appointed Attorney, $174.60; Foerster Distributing, Items For Courthouse, Janitorial Jail Supplies, $421.95; Chad Ford, Zoning Meeting Mileage, $102.84; Full Compass Systems, Lt, Portable Sound System, $1,607.60; Jennifer Goldammer, Court Appointed Attorney, $1,474.40; Patricia J Hartsel, Transcripts, $53.20; Heartland Veterinary Clinic, Annual Wellness, $210.72; Tim Hogan, Court Appointed Attorney, $2,240.05; Hometown Service & Tire,, Tires/Alignment, $685.63; Hungerford Chiropractic, Instant Drug Testing, $180.00; I State Truck Center, Scotseal/Gasket, $47.78; Infinite Welding And Mac, Fix

Mailbox, $22.82; Info Cubic LLC, Background Checks, $905.00; Interstate Power Systems, Repair, $6,697.70; Interstate Telecom. Coop, Bcoac Phones, Domain, Advertis, $371.20; Jackrabbit Sports Proper, Sponsorship, $1,000.00; L&L Auto & Truck Parts, Repair Parts, Break Line Hose, $585.67; L.G. Everist Inc, Quartzite, $13,420.98; Lewis Drug Store, June Bill, $509.78; Lincoln County Sheriff, Service Of Civil Papers, $50.00; Lowe's, Flatfree Shop, Parts For Hvac, $62.60; Reed T Mahlke, Court Appointed Attorney, $611.10; Martin Oil Company, Mobile Grease/Diesel, $1,014.87; Mediacom LLC, July Law Service Internet, $160.57; National 4-H Council - S, 4-H Event Materials And Merch, $183.70; Nancy J Nelson, Court Appointed Attorney, $591.70; Teree A Nesvold, Court Appointed Attorney, $1,338.60; North Central Internatio, O Ring And Seal, $97.25; Northwestern Energy, Natural Gas Usage, Truck Shop/Highway Shop, June/July Statement, Heat For Truck Shed, $145.06; Nu-Tech Environmental, Carpet Cleaning, $95.00; Office Peeps Inc, Envelopes, Chairs For Comm Office/Supplies, Note Pads/Dispenser/Clipboards, Divider Tabs/Markers, Paper And Pens, $1,361.99; One Source, Hand Sanitizer, $51.98; Outlaw Graphics, Graphic, $89.00; Pharmchem Inc, Sweat Patch Analysis, $57.10; Pheasantland Industries, Jail Covid Supplies, $297.21; Prochem Dynamics LLC, Cleaning Supplies, Gloves, $794.64; Qualified Presort Servic, Work From 6/1-6/30, $54.38; Razors Edge Grounds Keep, Grounds Maintenance, Mow, $2,230.00; RC First Aid, Patrol First Aid Kit, $130.00; Ivan Redinger, Rent, $600.00; Reliance Telephone, Phone Card Transaction, $200.00; RFD Newspapers Inc, Publications, $2,392.78; Rogers Warehouse, Ammo For The Range, $569.98; Rolling Thunder – Chapter, POW/MIA Flags, $190.00; Running's Supply Inc, K9 Supplies, $255.27; Safe-N-Secure, New Communicator For Monitor, $431.66; Satellite Tracking Of Pe, Blutag Active, $1,485.25; Schaffer Law Office, Pro, 6/4-6/26, $1,734.05; SD Attorney General's Off, 24/7 Sobriety Program, $4,016.00; SD Trial Lawyers Associa, Membership 2020-2021, $100.00; Sdaco, Modernization&Preservation Rel, $1,524.00; Sioux Equipment, Repair Diesel Tank, $249.50; Sioux Falls Kenworth Inc, Plug-Gauge, $139.68; Sioux Valley Energy, Electric, $260.00; Southpaw Defense, Sd Concealed Carry, $400.00; Sturdevant's Auto Parts, Parts/Temp Control, Solenoid/Parts, $438.11; Thomson Reuters - West, Information Charges, $1,366.33; Town Of Sinai, Sewer/Garbage, $64.00; Transource, Repair Parts/Hood, $5,621.41; UPS Store, Shipping/Sales Tax, $12.48; Steven Ust, Inspections, $1,500.00; Van Diest Supply Company, Biomist, $375.00; Vandenberg Law, Court Appointed Attorney, $1,915.75; Walburg, Duane, Animal Control Mileage, $115.92; Walmart Community, Class Supplies/Safety Meeting, $244.47; Water Works Llc, Service Call, $94.76; Wheelco Truck & Trailer, Parts/Materials, $2,790.06; WW Tire Service Inc, Repair Flat, $114.50; Yankton County Sheriff, Service Of Process, $50.00; Yankton County Treasurer, Mental Illness Charges, $98.25.

Department Head Reports

Community Health Nurse Karen Larsen was present to report on the Bi-Annual Commission Report Summary. Larsen said due to the COVID-19 Pandemic, their method of program administration has not ceased, but it has changed slightly. She said they continue to support the families who participate in the WIC program via telephone.

Larsen said they are currently reaching out to families who are not up-to-date on recommended immunizations and offering them an appointment or referring completion of a Well Child visit with their primary care physician.

Larsen said they are in the planning stages for the 2020-2021 school year services.

Larsen said they have a WIC Federal Civil Rights review in August. She also said Brookings County POD will have a flu immunization event in November. Commissioner Pierce asked if that event will be held on campus. Larsen said she believes it will be held at the Swiftel Center.

Highway Superintendent Brian Gustad said chip sealing will begin August 3rd for county roads 7, 9, 4, 5 and 35. Gustad said that project will take about 4-5 days.

Gustad updated the board on the bridges on south Highway 77. He said the board will be seeing a change order later in the meeting regarding the completion date. Gustad said Prahm Construction experienced high water levels, which delayed the project and then ran into obstructions, which slowed the progress of the project. He said the new completion date will be November 1st.

Finance Officer Vicki Buseth said they are starting to receive levy requests.

Finance Officer's Report

Finance Officer Vicki Buseth presented the Finance Officer's Report for June 2020.

June 2020

Total amount of deposits in bank……$31,808,891.88
Total amount of actual cash: Currency……..$5,928.00
Coins……..$0.96
Total amount of checks/drafts in Treasurer's possession not exceeding 3 days…$69,432.31
Itemized list of all other items……..$11,149.11
TOTAL……$31,895,402.26

Commission/HR: $26,295.83; Elections: $1,674.00; Finance Office: $29,789.85; States Attorney: $37,736.01; Equalization: $26,444.53; Register of Deeds: $12,711.60; Veterans/Welfare: $9,349.60; Sheriff's Office: $155,179.04; Coroner: $461.54; Community Health: $4,477.50; Extension: $2,870.42; Weed: $7,849.01; Planning/Zoning: $8,541.02; Highway: $70,884.61; Emergency Management: $5,832.60; BCOAC: $9,261.50; Technology: $12,480.00.

AFLAC: $3,677.18; Avesis: $1,284.10; Office of Child Support: $1,697.00; Delta Dental: $5,763.40; Flex One: $1,942.96; Principal Life Insurance: $1,727.08; Local Teamsters: $1,057.00; SDRS: $47,379.78; SDRS Supplemental: $1,975.00; EFTPS: $94,999.22; Wellmark: $95,792.38; AFLAC Group/CAIC Primary: $246.66.

Be it noted, the expenditure adjustments for the month of June 2020 were presented to the board. $2,965.08 was transferred to allocate highway department expenditures to other county departments for work performed and supplies furnished by the highway department.

Be it noted, the Registered of Deeds Statement of Fees collected for the month of June 2020 in the amount of $46,979.50 was presented to the board.

Sheriff Marty Stanwick said Pioneer Days in White was cancelled but the owners of Corner Gas & Goodies held some of the events at their location. Stanwick said everything went smooth.

Stanwick said they received a complaint on Lake Goldsmith. He said they received a tip that someone drove a snowmobile into the lake. Stanwick said the snowmobile was recovered.

County Development Director Robert Hill said two thunderstorm warnings were issued this week with 2-4 inches of rain being reported along with some hail.

Hill said he attended the NACo General Business Meeting and attended the NACo Board Meeting. Hill also said he attended the PPCC Meeting and reported that there will be a full-scale exercise in November.

Hill said the Census Bureau will be knocking on doors starting August 11th.

Hill said a countywide siren test was conducted on July 7th.

Hill said Banner Associates started a survey project for Medary Township; he said they are almost finished with it.

Director of Equalization Jacob Brehmer said the Department of Revenue released the top dollar for the productivity method of valuation on agricultural land. He said the crop top dollar this year will be $3,621.23. Brehmer said top dollar for non-crop or pasture rating will be $2,166.58. He said the average per acre value of agricultural land is $2,223.00.

BCOAC Director Dustin Huber reported on attendance at the facility.

He said he and Southpaws Defense, LLC owner Michael Kilmer have scheduled three more pistol classes. Huber said the Safety Picnic is scheduled for Thursday, July 23rd.

Huber said Ashley Biggar, a local artist in Brookings, came and painted the windows.

Veterans & Human Services Director Michael Holzhauser said the veteran's side has been very busy.

SCHEDULED AGENDA ITEM

Motion by Pierce, seconded by Krogman to remove Resolution #20-42 from the table. All members voted "aye." Motion carried.

The motion on the table is as follows: Motion by Boersma, seconded by Krogman to approve and authorize Chairperson Bartley to sign Resolution #20-42 as amended: a resolution authorizing the purchase of HVAC systems, installation and service with related products and supplies through Sourcewell.

Commissioner Boersma said she spoke to Ryan Van Der Bill with Associated Consulting Engineering Inc. and said if there were further questions about the chiller system or if the commission wanted an independent 3rd party to review the new chiller system, they could do that for approximately $2,000.00.

Commissioner Pierce asked if there's been any issues with the current chiller not being big enough to cool the facility. Commission Department Director Stacy Steffensen said no, it's just seen its useful life.

Tom Hunstad, Account Manager with Johnson Controls, Inc. said there are no current issues with the chiller; it's becoming age related. Hunstad said the refrigerant is no longer available and hasn't been produced in the U.S. since 2015. He said there are two chillers at the courthouse; one runs and on warmer days the other one kicks on.

Bartley asked which chiller is being replaced. Hunstad said they will replace both chillers with one big one. He said they will be increasing the size of the chiller but using the same electrical system. Bartley asked about the timeline. Hunstad said he would like to do it either September or October. He said the warranty will start when the startup is in effect. Pierce said if it's installed in September and not used until May, the 90 days from date of installation warranty

does not apply. Hunstad said it does not apply, they will move it to May or when startup is in effect.

Roll call vote: Krogman "aye," Jensen "aye," Pierce "aye," Boersma "aye," Bartley "aye." Motion carried.

RESOLUTION #20-42

A RESOLUTION AUTHORIZING THE PURCHASE OF
HVAC SYSTEMS, INSTALLATION AND SERVICE
WITH RELATED PRODUCTS AND SUPPLIES THROUGH SOURCEWELL

WHEREAS, Brookings County will need HVAC systems, installation and service with related products and supplies; and

WHEREAS, Sourcewell has gone through a competitive bidding process for HVAC systems, installation and service with related products and supplies with such bidding process culminating in the bids being opened on May 8, 2017 with the bid contract expiring on May 8, 2021;

WHEREAS, Johnson Controls, Inc., was the lowest responsible bidder under such Sourcewell bid process and Johnson Controls, Inc., is willing to provide equipment to BROOKINGS COUNTY under the same terms and options as available to Sourcewell, a copy of such bid specifications and bid having been filed at the Brookings County Finance Office; and

WHEREAS, pursuant to SDCL 5-18A-22, BROOKINGS COUNTY is authorized to purchase supplies or services from any active contract that has been awarded by any governmental entity by competitive sealed bids or competitive sealed proposals or from any contract that was competitively solicited and awarded within the previous twelve months;

NOW THEREFORE BE IT RESOLVED that Brookings County is hereby authorized and directed to contract for the removal and replacement of two chillers at the courthouse based upon the bid price, or less, as established through the competitive bidding process of Sourcewell.

Adopted this 21st day of July, 2020.

Michael Bartley
Chairperson, Brookings County
Board of County Commissioners

ATTEST

Vicki Buseth
Brookings County Finance Officer

REGULAR BUSINESS

Motion by Boersma, seconded by Jensen to approve and authorize Chairperson Bartley to sign Agreement #20-40: a contract with AMP Electric to add a generator feed with power transfer to the BCOAC. Background information was provided by BCOAC Director Dustin Huber.

Roll call vote: Jensen "aye," Pierce "aye," Boersma "aye," Krogman "aye," Bartley "aye." Motion carried.

Motion by Pierce, seconded by Jensen to approve and authorize Chairperson Bartley to sign Abatement #20-31: an abatement request made by Brenda Pratt for parcel #37350-00300-004-00 in the amount of $326.81. Background information was provided by Director of Equalization Jacob Brehmer.

Roll call vote: Pierce "aye," Boersma "aye," Krogman "aye," Jensen "aye," Bartley "aye." Motion carried.

Motion by Boersma, seconded by Jensen to approve South Dakota Department of Transportation Construction Change Order #6 for project #BRF 6319(00)17-4.

Roll call vote: Boersma "aye," Krogman "aye," Jensen "aye," Pierce "aye," Bartley "aye." Motion carried.

Motion by Krogman, seconded by Boersma to automatically supplement for unanticipated expenses incurred and reimbursement made to Brookings County for reimbursement from the City of Brookings and Brookings Municipal Utilities for the ESRI agreement, receipt #00509056 and #00511824 in the amount of $26,666.66.

Background information was provided by Commission Department Director Stacy Steffensen.

All members voted "aye." Motion carried.

Motion by Boersma, seconded by Krogman to automatically supplement for unanticipated expenses incurred and reimbursement made to Brookings County for reimbursement for double payment from Office Peeps for office furniture at Community Health, receipt #00515653 in the amount of $339.00.

Background information was provided by Commission Department Director Stacy Steffensen.

All members voted "aye." Motion carried.

Motion by Boersma, seconded by Krogman to approve and authorize Chairperson Bartley to sign a Request to Fill Vacancy for an Equipment Operator in the Highway Department.

All members voted "aye." Motion carried.

Motion by Jensen, seconded by Krogman to approve the appointment of Angie Schmitz to the Housing & Redevelopment Commission to a term ending December 31, 2025.

Background information was provided by Commission Department Director Stacy Steffensen.

All members voted "aye." Motion carried.

Motion by Boersma, seconded by Krogman to approve a Conflict of Interest Policy for Brookings County. Krogman said he thinks the document is missing consumables. Pierce referenced SDCL 2-12-18. Pierce said she would be comfortable adding a bullet point under 'outside compensation, gifts, gratuities' saying "any food or beverage with a value less than $100 provided for immediate consumption." Pierce also addressed contributions when campaigning.

Motion by Krogman, seconded by Boersma to amend the main motion to include two additional bullet points under 'Outside Compensation, Gifts and Gratuities': "Any entertainment, food or beverage with a value less than $100 meant for immediate consumption" and "Any contribution to an election campaign." All members voted "aye." Amendment carried.

Pierce asked if any of the department heads had any input before voting.

All members voted "aye." Main motion as amended carried.

Commission Department Director Stacy Steffensen said the Safety Picnic is scheduled Thursday, July 23rd from 11:00 a.m. – 2:00 p.m. at the Brookings County Outdoor Adventure Center.

States Attorney Dan Nelson had nothing to report.

COMMISSIONERS' REPORTS & DISCUSSION

Commissioner Pierce attended the Public Affairs Committee Meeting.

Commissioner Boersma attended budget hearings; attended the jail expansion bid opening; attended the NACo Town Hall Meeting; attended an ICAP Meeting; debriefed with Henry Carlson Construction; attended the NACo Annual Meeting; and attended the Brookings Behavioral Health & Wellness Meeting.

Commissioner Krogman attended and reported on the BATA & TSP Meeting.

Commissioner Jensen attended budget hearings and attended the jail expansion bid opening. Jensen said he received a call from Elkton Township regarding a pipeline being installed. He said a dairy received a permit from the state but still needed to get permits from the county and township.

Commissioner Bartley attended budget hearings; attended the PPCC Meeting; attended the jail expansion bid opening; listened to the NACo Town Hall Meeting; and attended the NACo Annual Meeting.

Chairperson Bartley declared a 20 minute recess.

SCHEDULED AGENDA ITEM

As scheduled at 10:00 a.m., the board was presented with the Jail Expansion/Remodel Bids.

EXECUTIVE SESSION

Motion by Boersma, seconded by Krogman to enter into Executive Session at 10:19 a.m., in accordance with SDCL 1-25-2(4) contract negotiations. All members voted "aye." Motion carried.

Motion by Boersma, seconded by Pierce to come out of Executive Session at 11:48 a.m. All members voted "aye." Motion carried. No action was taken.

ADJOURNMENT

Motion by Boersma, seconded by Jensen to adjourn. All members voted "aye." Motion carried. The next regular scheduled meeting is Tuesday, August 4, 2020 at 8:30 a.m.

It is the policy of Brookings County, South Dakota not to discriminate against the Handicapped of Employment or the Provision of Service. The County of Brookings is responsive to requests for communication aids and the need to provide appropriate access, and will provide alternative formats and accessible locations consistent with the Americans with Disabilities Act.

_____

Jenna Byrd
Senior Finance Assistant
Brookings County

Published once at the approximate cost of___.

Brookings County

Travel / Education Request Form

Name(s): Reid Squires

Department: Equalization **Position(s):** Deputy Director

Date(s)	Beginning Odometer	Ending Odometer	Destination
July 30, 2020			Aberdeen, SD

Reason for Travel:
Ag Land Adjustments Workshop

Passengers:

Estimated Expenses:

- Method of Travel: ⦿ County Vehicle ○ Private Auto

  _____ Miles @ $ _____ /per mile = $ 0.00

- Meals: _____ Breakfast(s) @ $ _____ = $ 0.00

  1 Lunch(s) @ $ 14.00 = $ 14.00

  _____ Dinner(s) @ $ _____ = $ 0.00

- Additional Expenses (taxi, parking, etc.):

  Please list: _____ = $ _____

- Lodging (Estimated number of nights): _____ = $ _____

- Registration (Estimated cost): _____ = $ _____

Total Cost Estimate: = $ 14.00

Department Head designated mileage rate: $ /per mile

Department Head Signature

July 17, 2020
Date

Ag Adjustment WORKSHOP

SD DOR DEPARTMENT OF REVENUE

July 8

Mitchell

Davison County Extension Office
3200 W Haven

July 17

Rapid City

Pennington County Admin Bldg.
1300 Kansas City St.

Lower Level

July 20

Sturgis

Meade County Admin Bldg.
1300 Sherman St.

Commission Room - 2nd Floor

July 30

Aberdeen

Brown County Court House
25 Market St.

Community Room
Basement of West Annex

August 7

Pierre

Mathews Training Center
523 E Capital Ave.

Ground Floor of Foss Building

Personnel Action Notice Summary

Commission Meeting: August 4, 2020

Employee Name:	Mitchell Lang				
Department:	Highway		**Position:**	Equipment Operator	
Effective Date:	07/21/2020		**Salary/Wage:**	$	19.08
Status:	Full Time	Part Time	Temp / Seasonal	Exempt	Non Exempt
Reason:	Performance Review	New Hire	Resignation or Termination	Status Change	

Employee Name:	Melissa Walsh				
Department:	Equalization		**Position:**	Administrative Assistant	
Effective Date:	08/01/2020		**Salary/Wage:**	$	19.59
Status:	Full Time	Part Time	Temp / Seasonal	Exempt	Non Exempt
Reason:	Performance Review	New Hire	Resignation or Termination	Status Change	

Employee Name:	Jay Wulf				
Department:	Weed & Pest/Highway		**Position:**	Truck Driver	
Effective Date:	08/03/2020		**Salary/Wage:**	$	18.34
Status:	Full Time	Part Time	Temp / Seasonal	Exempt	Non Exempt
Reason:	Performance Review	New Hire	Resignation or Termination	Status Change	

Employee Name:					
Department:			**Position:**		
Effective Date:			**Salary/Wage:**		
Status:	Full Time	Part Time	Temp / Seasonal	Exempt	Non Exempt
Reason:	Performance Review	New Hire	Resignation or Termination	Status Change	

For Commission Use Only

Date Submitted to Board of County Commissioners: August 4, 2020

Reference #: 20-064

Request: Rent/lodging

Amount: $ 218.55

Recommendation of County Assistance Officer: Approved Rent/Past Due Eviction Status

Reference #: 20-065

Request: Rent

Amount: $ 480.00

Recommendation of County Assistance Officer: Approved Rent/Past Due Eviction Status

Reference #: 20-070

Request: Funeral

Amount: $ 3,000.00

Recommendation of County Assistance Officer: Approved County Burial

Reference #: 20-0

Request:

Amount:

Recommendation of County Assistance Officer:

Reference #: 20-0

Request:

Amount:

Recommendation of County Assistance Officer:

VENDOR SET: 01 Brookings County ITEMS PRINTED: PAID, UNPAID

PACKET: 02314 8.4.2020 CLAIMS

FUND : 101 GENERAL FUND

DEPARTMENT: 111 COMMISSIONERS BANK: ALL

VENDOR	NAME	ITEM #	G/L ACCOUNT	DESCRIPTION	CHECK#	AMOUNT
01-10012	A&B BUSINESS INC	I-202007277035	101-4-111-4250	COPIER CONTRACT		105.60
01-11921	WELLS FARGO	I-202007277151	101-4-111-4260	FIN CHARGES		141.04
01-11921	WELLS FARGO	I-202007277151	101-4-111-4267	POSTAGE		4.39
01-12309	OUTLAW GRAPHICS	I-202007277112	101-4-111-4260	DETENTION CENTER SIGN		256.00
01-19517	MCGRATH NORTH MULLIN &	I-202007277089	101-4-111-4220	PROF SERVICES THROUGH 6/30/20		62.00
				DEPARTMENT 111 COMMISSIONERS	TOTAL:	569.03

VENDOR SET: 01 Brookings County ITEMS PRINTED: PAID, UNPAID

PACKET: 02314 8.4.2020 CLAIMS

FUND : 101 GENERAL FUND

DEPARTMENT: 120 ELECTIONS BANK: ALL

VENDOR	NAME	ITEM #	G/L ACCOUNT	DESCRIPTION	CHECK#	AMOUNT
01-10924	ELECTION SYSTEMS & SOFT	I-202007277058	101-4-120-4220	MAINTENANCE AND LICENSE		6,052.50
01-10924	ELECTION SYSTEMS & SOFT	I-202007277059	101-4-120-4220	CODING & LAYOUT CHARGE BALLOT		1,905.99
01-22367	BPRO INC	I-202007277045	101-4-120-4222	EPOLLBOOK SUPPORT		4,800.00
				DEPARTMENT 120 ELECTIONS	TOTAL:	12,758.49

VENDOR SET: 01 Brookings County ITEMS PRINTED: PAID, UNPAID
PACKET: 02314 8.4.2020 CLAIMS
FUND : 101 GENERAL FUND
DEPARTMENT: 130 JUDICIAL SYSTEM BANK: ALL

VENDOR	NAME	ITEM #	G/L ACCOUNT	DESCRIPTION	CHECK#	AMOUNT
01-10125	ARAGON, ANTONIO	I-202007277036	101-4-130-4290	TRANSLATION		87.50
01-12179	NANCY J NELSON	I-202007277096	101-4-130-4222	CAA CRI20-309		412.25
01-12179	NANCY J NELSON	I-202007277097	101-4-130-4222	CAA CRI20-7		402.55
01-12179	NANCY J NELSON	I-202007277098	101-4-130-4222	CAA CRI19-1098		1,023.35
01-12602	RICK RIBSTEIN	I-202007277119	101-4-130-4222	CAA CRI19-512		167.10
01-13045	SD STATE TREASURER	I-202007277130	101-4-130-4280	WITNESS & JURY		361.84
01-13262	VANDENBERG LAW	I-202007277141	101-4-130-4222	CAA CRI19-795		606.25
01-13262	VANDENBERG LAW	I-202007277142	101-4-130-4222	CAA CRI20-119		1,018.50
01-13370	THOMSON REUTERS - WEST	I-202007277136	101-4-130-4340	INV 842705836		219.26
01-17926	TIM HOGAN	I-202007277072	101-4-130-4222	CAA CRI19-1026		2,332.90
01-17926	TIM HOGAN	I-202007277073	101-4-130-4222	CAA CRI20-365		529.85
01-19694	REED T MAHLKE	I-202007277087	101-4-130-4222	CAA CRI19-1272		606.25
01-19694	REED T MAHLKE	I-202007277088	101-4-130-4222	CAA CRI19-747		722.65
01-20985	FITE, PIERCE & RONNING	I-202007277063	101-4-130-4222	CAA CRI18-60; 17-641		649.90
01-20985	FITE, PIERCE & RONNING	I-202007277064	101-4-130-4222	CAA CRI19-1152		1,415.50
01-20985	FITE, PIERCE & RONNING	I-202007277065	101-4-130-4222	CAA CRI19-1007		455.90
01-20985	FITE, PIERCE & RONNING	I-202007277066	101-4-130-4222	CAA CRI20-166		552.90
01-22039	JENNIFER GOLDAMMER	I-202007277069	101-4-130-4222	CAA CRI19-1258		811.20
01-22102	ANTHONY TEESDALE	I-202007277132	101-4-130-4222	CAA CRI20-295		383.15
01-22102	ANTHONY TEESDALE	I-202007277133	101-4-130-4222	CAA CRI19-383; CRI17-1120		558.15
01-22522	TEREE A NESVOLD	I-202007277099	101-4-130-4222	CAA CRI20-60		863.30
01-22522	TEREE A NESVOLD	I-202007277100	101-4-130-4222	CAA CRI19-406		218.25
01-22522	TEREE A NESVOLD	I-202007277101	101-4-130-4222	CAA CRI20-31		936.05
01-22522	TEREE A NESVOLD	I-202007277102	101-4-130-4222	CAA CRI19-1123		3,776.00
01-22697	BLUE EARTH COUNTY SHERI	I-202007277043	101-4-130-4290	SERVICE OF CIVIL PAPERS		65.00

DEPARTMENT 130 JUDICIAL SYSTEM TOTAL: 19,175.55

VENDOR SET: 01 Brookings County ITEMS PRINTED: PAID, UNPAID

PACKET: 02314 8.4.2020 CLAIMS

FUND : 101 GENERAL FUND

DEPARTMENT: 143 FINANCE OFFICE BANK: ALL

VENDOR	NAME	ITEM #	G/L ACCOUNT	DESCRIPTION	CHECK#	AMOUNT
01-10012	A&B BUSINESS INC	I-202007277034	101-4-143-4250	COPIER CONTRACT		74.80
01-12261	OFFICE PEEPS INC	I-202007277108	101-4-143-4260	COPIER CONTRACT		439.86
01-19128	EXECUTIVE MGMT FINANCE	I-202007277061	101-4-143-4280	TECHNOLOGY ACCESS FEE		56.25
				DEPARTMENT 143 FINANCE OFFICE	TOTAL:	570.91

VENDOR SET: 01 Brookings County ITEMS PRINTED: PAID, UNPAID
PACKET: 02314 8.4.2020 CLAIMS
FUND : 101 GENERAL FUND
DEPARTMENT: 151 STATES ATTORNEY BANK: ALL

VENDOR	NAME	ITEM #	G/L ACCOUNT	DESCRIPTION	CHECK#	AMOUNT
01-10012	A&B BUSINESS INC	I-202007277033	101-4-151-4260	COPIER CONTRACT		68.97
01-12261	OFFICE PEEPS INC	I-202007277107	101-4-151-4260	COPIER CONTRACT		286.73
01-22008	NEWEGG BUSINESS INC	I-202007277103	101-4-151-4260	MULTIPLE INVOICES		54.32
				DEPARTMENT 151 STATES ATTORNEY	TOTAL:	410.02

VENDOR SET: 01 Brookings County ITEMS PRINTED: PAID, UNPAID

PACKET: 02314 8.4.2020 CLAIMS

FUND : 101 GENERAL FUND

DEPARTMENT: 161 COUNTY BUILDING BANK: ALL

VENDOR	NAME	ITEM #	G/L ACCOUNT	DESCRIPTION	CHECK#	AMOUNT
01-10792	DEN-WIL INC	I-202007277054	101-4-161-4241	COMMUNITY HEALTH RENT		960.00
01-11078	FOERSTER DISTRIBUTING	I-202007277068	101-4-161-4260	ITEMS FOR COURTHOUSE		176.30
01-11921	WELLS FARGO	I-202007277151	101-4-161-4243	PROTECTIVE COVER		51.86

DEPARTMENT 161 COUNTY BUILDING TOTAL: 1,188.16

VENDOR SET: 01 Brookings County ITEMS PRINTED: PAID, UNPAID
PACKET: 02314 8.4.2020 CLAIMS
FUND : 101 GENERAL FUND
DEPARTMENT: 162 DIRECTOR OF EQUALIZATION BANK: ALL

VENDOR	NAME	ITEM #	G/L ACCOUNT	DESCRIPTION	CHECK#	AMOUNT
01-13370	THOMSON REUTERS - WEST	I-202007277135	101-4-162-4260	2020 LAW UPDATE		19.46
				DEPARTMENT 162 DIRECTOR OF EQUALIZATI TOTAL:		19.46

VENDOR SET: 01 Brookings County ITEMS PRINTED: PAID, UNPAID

PACKET: 02314 8.4.2020 CLAIMS

FUND : 101 GENERAL FUND

DEPARTMENT: 165 VETERAN'S SERVICE BANK: ALL

VENDOR	NAME	ITEM #	G/L ACCOUNT	DESCRIPTION	CHECK#	AMOUNT
01-22417	ECONO LODGE INN & SUITE	I-202007277056	101-4-165-4270	5 NIGHTS OF LODGING		218.55
				DEPARTMENT 165 VETERAN'S SERVICE	TOTAL:	218.55

VENDOR SET: 01 Brookings County ITEMS PRINTED: PAID, UNPAID

PACKET: 02314 8.4.2020 CLAIMS

FUND : 101 GENERAL FUND

DEPARTMENT: 171 INFORMATION TECHNOLOGY BANK: ALL

VENDOR	NAME	ITEM #	G/L ACCOUNT	DESCRIPTION	CHECK#	AMOUNT
01-10012	A&B BUSINESS INC	I-202007277035	101-4-171-4250	COPIER CONTRACT		115.72
01-11921	WELLS FARGO	I-202007277151	101-4-171-4221	CRASHPLAN		9.99
01-11994	MID STATES AUDIO INC	I-202007277092	101-4-171-4260	COURTROOM MICROPHONE		242.25
01-19686	PICTOMETRY INTERNATIONA	I-202007277114	101-4-171-4221	2ND PYMT 2019 FLYOVER		38,589.00
01-22008	NEWEGG BUSINESS INC	I-202007277103	101-4-171-4260	MULTIPLE INVOICES		853.13
01-22008	NEWEGG BUSINESS INC	I-202007277103	101-4-171-4221	MULTIPLE INVOICES		229.99

DEPARTMENT 171 INFORMATION TECHNOLOGY TOTAL: 40,040.08

VENDOR SET: 01 Brookings County ITEMS PRINTED: PAID, UNPAID
PACKET: 02314 8.4.2020 CLAIMS
FUND : 101 GENERAL FUND
DEPARTMENT: 172 HUMAN RESOURCES BANK: ALL

VENDOR	NAME	ITEM #	G/L ACCOUNT	DESCRIPTION	CHECK#	AMOUNT
01-10012	A&B BUSINESS INC	I-202007277035	101-4-172-4250	COPIER CONTRACT		21.12
01-10162	AVERA OCCUPATIONAL MEDI	I-202007277040	101-4-172-4220	TPA SERVICES		60.55
				DEPARTMENT 172 HUMAN RESOURCES	TOTAL:	81.67

VENDOR SET: 01 Brookings County ITEMS PRINTED: PAID, UNPAID

PACKET: 02314 8.4.2020 CLAIMS

FUND : 101 GENERAL FUND

DEPARTMENT: 211 SHERIFF'S OFFICE BANK: ALL

VENDOR	NAME	ITEM #	G/L ACCOUNT	DESCRIPTION	CHECK#	AMOUNT
01-10918	EINSPAHR AUTO PLAZA	I-202007277057	101-4-211-4251	PATROL VEHICLE MAINT		134.63
01-12910	TWO WAY SOLUTIONS INC	I-202007277138	101-4-211-4260	DEPUTY/JAIL BATTERIES		67.50
01-13045	SD STATE TREASURER	I-202007277130	101-4-211-4280	CELL PHONES		270.00
01-13045	SD STATE TREASURER	I-202007277130	101-4-211-4260	SH SUPPLIES		32.94
01-13045	SD STATE TREASURER	I-202007277130	101-4-211-4250	SH SUPPLIES		26.02
01-13291	VERIZON WIRELESS	I-202007277147	101-4-211-4280	DEPUTY TABLET		196.24
01-13370	THOMSON REUTERS - WEST	I-202007277134	101-4-211-4220	CODIFIED LAW BOOKS		219.26
01-18134	WALBURG, DUANE	I-202007277149	101-4-211-4221	ANIMAL CONTROL MILEAGE		128.10
01-20319	BUNKER AUTO INC	I-202007277050	101-4-211-4220	SNOWMOBILE RECOVERY		1,196.46
01-20466	AT&T MOBILITY	I-202007277038	101-4-211-4280	MOBILE SERVICES		400.40
01-21166	CENTURY LINK	I-202007277051	101-4-211-4280	INV 130904818		159.42
01-22093	ONE OFFICE SOLUTION	I-202007277111	101-4-211-4260	OFFICE & JAIL SUPPLIES		214.99
01-22347	BROOKINGS POWERSPORTS	I-202007277048	101-4-211-4251	UTV REPAIRS		130.95
01-22508	BRYAN SCHREUR	I-202007277127	101-4-211-4260	BOOT REIMBURSEMENT		100.00

DEPARTMENT 211 SHERIFF'S OFFICE TOTAL: 3,276.91

VENDOR SET: 01 Brookings County ITEMS PRINTED: PAID, UNPAID

PACKET: 02314 8.4.2020 CLAIMS

FUND : 101 GENERAL FUND

DEPARTMENT: 212 COUNTY JAIL BANK: ALL

VENDOR	NAME	ITEM #	G/L ACCOUNT	DESCRIPTION	CHECK#	AMOUNT
01-10357	AVERA MEDICAL GROUP	I-202007277039	101-4-212-4263	INMATE MEDICAL		979.26
01-10390	BROOKINGS HEALTH SYSTEM	I-202007277047	101-4-212-4263	INMATE MEDICAL		7,988.83
01-11078	FOERSTER DISTRIBUTING	I-202007277067	101-4-212-4260	JANITORIAL JAIL SUPPLIES		327.65
01-11453	HY-VEE FOOD STORE	I-202007277074	101-4-212-4290	INMATE MEALS		18,970.30
01-11855	MCKEEVER'S VENDING	I-202007277090	101-4-212-4260	INMATE COMMISSARY		412.68
01-12567	RELIANCE TELEPHONE	I-202007277118	101-4-212-4281	PHONE CARD TRANSACTIONS		2,000.00
01-12607	RICHARD-EWING EQUIP INC	I-202007277120	101-4-212-4250	JAIL/DRYER REPAIR		536.90
01-12910	TWO WAY SOLUTIONS INC	I-202007277137	101-4-212-4260	DEPUTY RADIOS/PATROL VEHICLES		82.50
01-12910	TWO WAY SOLUTIONS INC	I-202007277138	101-4-212-4260	DEPUTY/JAIL BATTERIES		67.49
01-13370	THOMSON REUTERS - WEST	I-202007277134	101-4-212-4220	CODIFIED LAW BOOKS		219.26
01-19149	SANFORD HEALTH	I-202007277124	101-4-212-4263	SANFORD HEALTH		398.96
01-22002	PROCHEM DYNAMICS LLC	I-202007277115	101-4-212-4260	JAIL CLEANING SUPPLIES		64.90
01-22070	ANDREW ERICKSON	I-202007277060	101-4-212-4260	BOOT REIMBURSEMENT		100.00
01-22093	ONE OFFICE SOLUTION	I-202007277111	101-4-212-4260	OFFICE & JAIL SUPPLIES		214.99
01-22530	WATER WORKS LLC	I-202007277150	101-4-212-4260	SALT BAGS		99.80
01-22566	SANFORD LABORATORIES	I-202007277125	101-4-212-4263	SANFORD LAB BILL		303.00
01-22700	AVERA PATIENT FINANCIAL	I-202007277041	101-4-212-4263	INMATE MEDICAL		40.00

DEPARTMENT 212 COUNTY JAIL TOTAL: 32,806.52

VENDOR SET: 01 Brookings County ITEMS PRINTED: PAID, UNPAID
PACKET: 02314 8.4.2020 CLAIMS
FUND : 101 GENERAL FUND
DEPARTMENT: 213 CORONER BANK: ALL

VENDOR	NAME	ITEM #	G/L ACCOUNT	DESCRIPTION	CHECK#	AMOUNT
01-19149	SANFORD HEALTH	I-202007277123	101-4-213-4220	AUTOPSY'S		6,925.00
				DEPARTMENT 213 CORONER	TOTAL:	6,925.00

VENDOR SET: 01 Brookings County ITEMS PRINTED: PAID, UNPAID

PACKET: 02314 8.4.2020 CLAIMS

FUND : 101 GENERAL FUND

DEPARTMENT: 214 JUVENILE DETENTION BANK: ALL

VENDOR	NAME	ITEM #	G/L ACCOUNT	DESCRIPTION	CHECK#	AMOUNT
01-12037	MINNEHAHA COUNTY JDC	I-202007277094	101-4-214-4291	JDC COSTS		473.80
				DEPARTMENT 214 JUVENILE DETENTION	TOTAL:	473.80

VENDOR SET: 01 Brookings County ITEMS PRINTED: PAID, UNPAID

PACKET: 02314 8.4.2020 CLAIMS

FUND : 101 GENERAL FUND

DEPARTMENT: 223 DRAINAGE COMMISSION BANK: ALL

VENDOR	NAME	ITEM #	G/L ACCOUNT	DESCRIPTION	CHECK#	AMOUNT
01-10012	A&B BUSINESS INC	I-202007277032	101-4-223-4250	COPIER CONTRACT		20.29
				DEPARTMENT 223 DRAINAGE COMMISSION TOTAL:		20.29

VENDOR SET: 01 Brookings County ITEMS PRINTED: PAID, UNPAID

PACKET: 02314 8.4.2020 CLAIMS

FUND : 101 GENERAL FUND

DEPARTMENT: 411 WELFARE BANK: ALL

VENDOR	NAME	ITEM #	G/L ACCOUNT	DESCRIPTION	CHECK#	AMOUNT
01-10012	A&B BUSINESS INC	I-202007277035	101-4-411-4270	COPIER CONTRACT		7.04
01-12273	OLSON APTS	I-202007277110	101-4-411-4251	RENT		480.00
01-12656	RUDE'S FUNERAL HOME INC	I-202007277122	101-4-411-4255	COUNTY BURIAL		3,000.00
01-22008	NEWEGG BUSINESS INC	I-202007277103	101-4-411-4272	MULTIPLE INVOICES		672.99
				DEPARTMENT 411 WELFARE	TOTAL:	4,160.03

VENDOR SET: 01 Brookings County ITEMS PRINTED: PAID, UNPAID

PACKET: 02314 8.4.2020 CLAIMS

FUND : 101 GENERAL FUND

DEPARTMENT: 441 BEHAVIORAL HEALTH BANK: ALL

VENDOR	NAME	ITEM #	G/L ACCOUNT	DESCRIPTION	CHECK#	AMOUNT
01-11634	KENNEDY PIER KNOFF LOFT	I-202007277080	101-4-441-4290	INV MI HEARING J.K.		97.00
01-11788	LEWIS & CLARK BEHAVIORA	I-202007277082	101-4-441-4220	BMI INTAKE		356.00
01-12033	MINNEHAHA COUNTY AUDITO	I-202007277093	101-4-441-4220	INV MI REIMBURSEMENT		245.26
01-20920	LEWNO, LUCY	I-202007277083	101-4-441-4220	INV MI HEARING K.A.		112.25
01-20920	LEWNO, LUCY	I-202007277084	101-4-441-4220	INV MI HEARING B.H.		165.00
01-21605	KATTERHAGEN, MARK	I-202007277077	101-4-441-4220	INV MI HEARING B.H.		15.00
01-21605	KATTERHAGEN, MARK	I-202007277078	101-4-441-4220	INV MI HEARING K.A.		6.00
01-21627	KCH LAW	I-202007277079	101-4-441-4290	INV MI HEARING K.H.		196.50
01-22147	DARCY LOCKWOOD	I-202007277085	101-4-441-4220	INV MI HEARING K.A.		6.00
01-22147	DARCY LOCKWOOD	I-202007277086	101-4-441-4220	INV MI HEARING B.H.		15.00

DEPARTMENT 441 BEHAVIORAL HEALTH TOTAL: 1,214.01

VENDOR SET: 01 Brookings County ITEMS PRINTED: PAID, UNPAID

PACKET: 02314 8.4.2020 CLAIMS

FUND : 101 GENERAL FUND

DEPARTMENT: 528 BCOAC BANK: ALL

VENDOR	NAME	ITEM #	G/L ACCOUNT	DESCRIPTION	CHECK#	AMOUNT
01-11371	HILLYARD/SIOUX FALLS	I-202007277071	101-4-528-4260	JANITORIAL ITEMS FOR BCOAC		454.49
01-11921	WELLS FARGO	I-202007277151	101-4-528-4230	NEXTSTAR/TAX CHARGES WIX SUPP		135.42
01-11921	WELLS FARGO	I-202007277151	101-4-528-4220	SMARTWAIVER ANNUAL PLAN		153.00
01-11921	WELLS FARGO	I-202007277151	101-4-528-4260	ammo/student study guide/targ		1,140.48
01-11921	WELLS FARGO	I-202007277151	101-4-528-4220	ammo/student study guide/targ		24.00
01-12261	OFFICE PEEPS INC	I-202007277105	101-4-528-4260	COPIER CONTRACT		79.80
01-21377	SAFE-N-SECURE	I-202007277113	101-4-528-4250	PROGRAMMING FIRE ALARMS		268.07
01-22306	BAN-KOE SYSTEMS INC	I-202007277042	101-4-528-4250	SAFE N SECURE MONITORING		771.00

DEPARTMENT 528 BCOAC TOTAL: 3,026.26

VENDOR SET: 01 Brookings County ITEMS PRINTED: PAID, UNPAID
PACKET: 02314 8.4.2020 CLAIMS
FUND : 101 GENERAL FUND
DEPARTMENT: 611 COUNTY EXTENSION BANK: ALL

VENDOR	NAME	ITEM #	G/L ACCOUNT	DESCRIPTION	CHECK#	AMOUNT
01-11921	WELLS FARGO	I-202007277151	101-4-611-4260	TRAINING SAFETY CONES		239.90
01-12261	OFFICE PEEPS INC	I-202007277106	101-4-611-4260	COPIER CONTRACT		42.33
01-12528	PAM RAEDER	I-202007277117	101-4-611-4292	HONORARIUM-VIRTUAL CONTEST JU		100.00
01-13267	GINA VANDERWAL	I-202007277143	101-4-611-4292	HONORARIUM-FASHION REVUE JUDG		50.00
01-20914	MICHELLE VANDERWAL	I-202007277144	101-4-611-4292	HONORARIUM-PHOTOGRAPHY JUDGE		55.88
01-21204	SUNDEM, DEB	I-202007277131	101-4-611-4292	HONORARIUM-VIRTUAL CONTEST JU		100.00
01-21803	BUHLS OF BROOKINGS CLEA	I-202007277049	101-4-611-4240	RUG CLEANING		23.70
01-22120	KARA ZAUG	I-202007277152	101-4-611-4292	HONORARIUM-VIRTUAL CONTEST JU		100.00
01-22693	KARLY SCHAUNAMAN	I-202007277126	101-4-611-4292	HONORARIUM-FASHION REVUE JUDG		50.00
01-22694	MARIE ROBBINS	I-202007277121	101-4-611-4292	HONORARIUM-FASHION REVUE JUDG		50.00
01-22695	SADIE VANDERWAL	I-202007277145	101-4-611-4292	HONORARIUM-FASHION REVUE JUDG		50.00
01-22696	CATIE KLEINDL	I-202007277081	101-4-611-4292	HONORARIUM-VIRTUAL CONTEST JU		100.00

DEPARTMENT 611 COUNTY EXTENSION TOTAL: 961.81

VENDOR SET: 01 Brookings County ITEMS PRINTED: PAID, UNPAID

PACKET: 02314 8.4.2020 CLAIMS

FUND : 101 GENERAL FUND

DEPARTMENT: 615 WEED CONTROL BANK: ALL

VENDOR	NAME	ITEM #	G/L ACCOUNT	DESCRIPTION	CHECK#	AMOUNT
01-13266	VAN DIEST SUPPLY COMPAN	I-202007277146	101-4-615-4260	4-D AMINE		2,150.00
				DEPARTMENT 615 WEED CONTROL	TOTAL:	2,150.00

VENDOR SET: 01 Brookings County ITEMS PRINTED: PAID, UNPAID

PACKET: 02314 8.4.2020 CLAIMS

FUND : 101 GENERAL FUND

DEPARTMENT: 711 PLANNING & ZONING BANK: ALL

VENDOR	NAME	ITEM #	G/L ACCOUNT	DESCRIPTION	CHECK#	AMOUNT
01-10012	A&B BUSINESS INC	I-202007277032	101-4-711-4250	COPIER CONTRACT		60.88
01-10012	A&B BUSINESS INC	I-202007277035	101-4-711-4250	COPIER CONTRACT		7.04
01-11453	HY-VEE FOOD STORE	I-202007277075	101-4-711-4260	REFRESHMENTS-ZONING MEETING		9.98
01-21401	HILL, ROBERT	I-202007277070	101-4-711-4260	REIMBURSEMENTS		14.75
01-21502	STEVEN UST	I-202007277139	101-4-711-4221	INSPECTIONS		400.00
01-21502	STEVEN UST	I-202007277140	101-4-711-4221	INSPECTIONS		900.00

DEPARTMENT 711 PLANNING & ZONING TOTAL: 1,392.65

VENDOR SET: 01 Brookings County ITEMS PRINTED: PAID, UNPAID

PACKET: 02314 8.4.2020 CLAIMS

FUND : 101 GENERAL FUND

DEPARTMENT: 712 1ST DISTRICT BANK: ALL

VENDOR	NAME	ITEM #	G/L ACCOUNT	DESCRIPTION	CHECK#	AMOUNT
01-11042	FIRST DISTRICT ASSOCIAT	I-202007277062	101-4-712-4290	4TH QTR PYMT		11,376.34
				DEPARTMENT 712 1ST DISTRICT	TOTAL:	11,376.34
				FUND 101 GENERAL FUND	TOTAL:	142,815.54

VENDOR SET: 01 Brookings County ITEMS PRINTED: PAID, UNPAID

PACKET: 02314 8.4.2020 CLAIMS

FUND : 201 ROAD & BRIDGE FUND

DEPARTMENT: 311 HIGHWAY ADMINISTRATION BANK: ALL

VENDOR	NAME	ITEM #	G/L ACCOUNT	DESCRIPTION	CHECK#	AMOUNT
01-10307	BOWES CONSTRUCTION	I-202007277044	201-4-311-4260	OVERLAY PROJECT		1,189,729.88
01-10664	CONCRETE MATERIALS INC	I-202007277052	201-4-311-4260	PEA ROCK		13,848.34
01-10765	DAVE'S COLLISION REPAIR	I-202007277053	201-4-311-4250	PAINT HOOD		1,275.00
01-10799	SD DEPT OF TRANSPORTATI	I-202007277128	201-4-311-4221	471ST ST		158,247.83
01-11979	MICHAELS FENCE	I-202007277091	201-4-311-4250	GATE REPAIR		414.28
01-12484	PRUSSMAN CONTRACTING CO	I-202007277116	201-4-311-4250	CULVERT WORK		1,234.20
01-13291	VERIZON WIRELESS	I-202007277148	201-4-311-4280	PHONE BILL		40.01
01-20310	DEPARTMENT OF MOTOR VEH	I-202007277055	201-4-311-4260	KENWORTH TRAILER FEES		21.20

DEPARTMENT 311 HIGHWAY ADMINISTRATION TOTAL: 1,364,810.74

FUND 201 ROAD & BRIDGE FUND TOTAL: 1,364,810.74

VENDOR SET: 01 Brookings County ITEMS PRINTED: PAID, UNPAID

PACKET: 02314 8.4.2020 CLAIMS

FUND : 226 EMERGENCY MANAGEMENT

DEPARTMENT: 222 EMERGENCY & DISASTER SERV BANK: ALL

VENDOR	NAME	ITEM #	G/L ACCOUNT	DESCRIPTION	CHECK#	AMOUNT
01-12773	SDEMA	I-202007277129	226-4-222-4220	MEMBERSHIP DUES		90.00
01-20466	AT&T MOBILITY	I-202007277037	226-4-222-4250	NIGHTHAWK MIFI MOBILE		40.04
01-21401	HILL, ROBERT	I-202007277070	226-4-222-4293	REIMBURSEMENTS		117.98
01-21401	HILL, ROBERT	I-202007277070	226-4-222-4260	REIMBURSEMENTS		5.00

DEPARTMENT 222 EMERGENCY & DISASTER S TOTAL: 253.02

FUND 226 EMERGENCY MANAGEMENT TOTAL: 253.02

VENDOR SET: 01 Brookings County ITEMS PRINTED: PAID, UNPAID

PACKET: 02314 8.4.2020 CLAIMS

FUND : 248 24/7 PROGRAM

DEPARTMENT: 212 24/7 PROGRAM BANK: ALL

VENDOR	NAME	ITEM #	G/L ACCOUNT	DESCRIPTION	CHECK#	AMOUNT
01-11500	INTOXIMETERS INC	I-202007277076	248-4-212-4260	JAIL PBT TEST TUBES		205.25
01-22698	NATIONAL TEST SYSTEMS	I-202007277095	248-4-212-4260	UA TEST KITS		2,600.84
				DEPARTMENT 212 24/7 PROGRAM	TOTAL:	2,806.09
				FUND 248 24/7 PROGRAM	TOTAL:	2,806.09

VENDOR SET: 01 Brookings County ITEMS PRINTED: PAID, UNPAID

PACKET: 02314 8.4.2020 CLAIMS

FUND : 250 ROD RELIEF FUND

DEPARTMENT: 163 ROD Relief Fund BANK: ALL

VENDOR	NAME	ITEM #	G/L ACCOUNT	DESCRIPTION	CHECK#	AMOUNT
01-12261	OFFICE PEEPS INC	I-202007277109	250-4-163-4260	COPIER CONTRACT		28.55
				DEPARTMENT 163 ROD Relief Fund	TOTAL:	28.55
				FUND 250 ROD RELIEF FUND	TOTAL:	28.55

VENDOR SET: 01 Brookings County ITEMS PRINTED: PAID, UNPAID
PACKET: 02314 8.4.2020 CLAIMS
FUND : 735 DELINQUENT TAXES
DEPARTMENT: N/A NON-DEPARTMENTAL BANK: ALL

VENDOR	NAME	ITEM #	G/L ACCOUNT	DESCRIPTION	CHECK#	AMOUNT
01-10367	BROOKINGS COUNTY FINANC	I-202007277046	735-2-2090000	DELINQUENT TAXES		799.63
				DEPARTMENT 0000 NON-DEPARTMENTAL	TOTAL:	799.63
				FUND 735 DELINQUENT TAXES	TOTAL:	799.63

VENDOR SET: 01 Brookings County ITEMS PRINTED: PAID, UNPAID

PACKET: 02314 8.4.2020 CLAIMS

FUND : 761 SHERIFF TRUST

DEPARTMENT: N/A NON-DEPARTMENTAL BANK: ALL

VENDOR	NAME	ITEM #	G/L ACCOUNT	DESCRIPTION	CHECK#	AMOUNT
01-10002	AAA COLLECTIONS, INC	I-202007277029	761-2-2090000	COLLECTIONS		1,239.33
01-10002	AAA COLLECTIONS, INC	I-202007277030	761-2-2090000	COLLECTIONS		945.70
01-10002	AAA COLLECTIONS, INC	I-202007277031	761-2-2090000	COLLECTIONS		1,339.43
01-22699	CHRISTY NICOLAISEN	I-202007277104	761-2-2090000	COLLECTION		1,444.49

DEPARTMENT 0000 NON-DEPARTMENTAL TOTAL: 4,968.95

FUND 761 SHERIFF TRUST TOTAL: 4,968.95

REPORT GRA TOTAL: 1,516,482.52

** G/L ACCOUNT TOTALS **

YEAR	ACCOUNT	NAME	AMOUNT	=========LINE ITEM========= ANNUAL BUDGET	BUDGET AVAILABLE	OVER BUDG	=======GROUP BUDGET======= ANNUAL BUDGET	BUDGET AVAILABLE	OVER BUDG
2020	101-4-111-4220	PROFESSIONAL SERV. & FEES	62.00	45,000	18,034.85				
	101-4-111-4250	REPAIR & MAINT.	105.60	4,000	3,202.05				
	101-4-111-4260	SUPPLIES & MATERIALS	397.04	4,000	1,872.26				
	101-4-111-4267	POSTAGE	4.39	32,500	3,705.67				
	101-4-120-4220	BALLOTS	7,958.49	18,000	2,715.61				
	101-4-120-4222	DATA PROCESSING/SOFTWARE	4,800.00	30,000	24,735.20				
	101-4-130-4222	ADULT DEFENSE	18,441.95	525,000	190,326.48				
	101-4-130-4280	JURY & WITNESS	361.84	15,000	8,807.34				
	101-4-130-4290	COURT CASE EXPENSE	152.50	40,000	22,028.00				
	101-4-130-4340	LAW LIBRARY	219.26	20,000	17,791.74				
	101-4-143-4250	REPAIR & MAINT.	74.80	3,400	2,002.60				
	101-4-143-4260	SUPPLIES & MATERIALS	439.86	15,000	6,934.52				
	101-4-143-4280	UTILITIES	56.25	2,800	1,255.25				
	101-4-151-4260	SUPPLIES & MATERIALS	410.02	30,000	16,699.74				
	101-4-161-4241	RENTAL/COMM. HEALTH	960.00	11,000	4,150.00				
	101-4-161-4243	ADMIN BUILDING OPERATION E	51.86	200,000	133,502.77				
	101-4-161-4260	SUPPLIES & MATERIALS	176.30	6,000	3,381.91				
	101-4-162-4260	SUPPLIES &N MATERIALS	19.46	8,500	5,507.88				
	101-4-165-4270	TRAVEL & CONFERENCE	218.55	5,000	4,511.29				
	101-4-171-4221	DATA PROCESSING/SOFTWARE	38,828.98	239,621	48,387.99				
	101-4-171-4250	REPAIRS AND MAINTENANCE	115.72	800	226.08				
	101-4-171-4260	SUPPLIES	1,095.38	28,300	301.94				
	101-4-172-4220	PROFESSIONAL SERVICES	60.55	18,000	3,566.35				
	101-4-172-4250	REPAIRS AND MAINTENANCE	21.12	800	640.41				
	101-4-211-4220	PROFESSIONAL SERV. & FEES	1,415.72	6,000	1,652.15				
	101-4-211-4221	ANIMAL CONTROL	128.10	5,000	3,854.92				
	101-4-211-4250	BUILDING MAINTENANCE	26.02	42,000	21,857.09				
	101-4-211-4251	VEHICLE MAINTENANCE	265.58	0	1,038.48-	Y			
	101-4-211-4260	SUPPLIES & MATERIALS	415.43	20,000	16,456.96				
	101-4-211-4280	UTILITIES	1,026.06	20,000	6,738.61				
	101-4-212-4220	PROFESSIONAL SERV. & FEES	219.26	4,000	1,445.15				
	101-4-212-4250	BUILDING MAINTENANCE	536.90	40,000	25,346.78				
	101-4-212-4260	SUPPLIES & MATERIALS	1,370.01	45,000	8,015.86				
	101-4-212-4263	MEDICAL SERVICE/LIENABLE	9,710.05	34,000	13,387.97				
	101-4-212-4281	INMATE/TELEPHONE	2,000.00	15,000	4,500.00				
	101-4-212-4290	PRISONER RATION	18,970.30	275,000	147,980.91				
	101-4-213-4220	PROFESSIONAL SERV. & FEES	6,925.00	25,000	11,320.00				
	101-4-214-4291	JDC-MINNEHAHA COUNTY	473.80	100,000	87,207.40				
	101-4-223-4250	REPAIRS AND MAINTENANCE	20.29	200	67.17				
	101-4-411-4251	RENT	480.00	30,000	17,968.00				
	101-4-411-4255	FUNERALS	3,000.00	20,000	11,000.00				
	101-4-411-4270	OFFICE	7.04	500	446.80				
	101-4-411-4272	SUPPLIES & MATERIALS	672.99	1,000	285.11				
	101-4-441-4220	PROFESSIONAL SERV. & FEES	920.51	50,000	22,572.14				

** G/L ACCOUNT TOTALS **

YEAR	ACCOUNT	NAME	AMOUNT	=========LINE ITEM========= ANNUAL BUDGET	BUDGET AVAILABLE	OVER BUDG	=======GROUP BUDGET======= ANNUAL BUDGET	BUDGET AVAILABLE	OVER BUDG
	101-4-441-4290	CRT APPORT. ATT'Y/M.I.	293.50	20,000	16,496.77				
	101-4-528-4220	PROFESSIONAL SERV & FEES	177.00	4,500	391.67				
	101-4-528-4230	PUBLISHING	135.42	20,000	7,336.00				
	101-4-528-4250	REPAIR & MAINT	1,039.07	45,000	32,687.51				
	101-4-528-4260	SUPPLIES & MATERIALS	1,674.77	35,000	24,365.15				
	101-4-611-4240	RENTALS	23.70	1,500	1,310.40				
	101-4-611-4260	SUPPLIES & MATERIALS	282.23	11,000	7,226.00				
	101-4-611-4292	4-H EVENTS & LIT.	655.88	8,250	6,093.71				
	101-4-615-4260	SUPPLIES & MATERIALS	2,150.00	60,000	28,464.04				
	101-4-711-4221	INSPECTION FEES	1,300.00	20,430	9,330.00				
	101-4-711-4250	REPAIRS & MAINTENANCE	67.92	2,160	1,708.35				
	101-4-711-4260	SUPPLIES & MATERIALS	24.73	3,915	300.86				
	101-4-712-4290	OTHERS	11,376.34	45,506	0.64				
	201-4-311-4221	BIG MATCHING GRANT	158,247.83	2,146,739	1702,444.20				
	201-4-311-4250	REPAIRS & MAINT.	2,923.48	2,000,000	1399,916.08				
	201-4-311-4260	SUPPLIES & MATERIALS	1203,599.42	1,100,000	610,640.41-	Y			
	201-4-311-4280	UTILITIES	40.01	30,000	13,196.19				
	226-4-222-4220	PROFESSIONAL SERV. & FEES	90.00	1,500	1,370.00				
	226-4-222-4250	REPAIRS AND MAINTENANCE	40.04	2,500	288.72				
	226-4-222-4260	SUPPLIES & MATERIALS	5.00	2,000	1,688.49				
	226-4-222-4293	DISASTER RECOVERY	117.98	16,310	12,015.37				
	248-4-212-4260	SUPPLIES & MATERIALS	2,806.09	30,000	25,908.70				
	250-4-163-4260	SUPPLIES	28.55	7,000	2,322.34				
	735-2-2090000	AM'T HELD FOR DEL. TAXES	799.63						
	761-2-2090000	AM'T HELD FOR SHERIFF TRUS	4,968.95						
		** 2020 YEAR TOTALS	1516,482.52						

** DEPARTMENT TOTALS **

ACCT	NAME	AMOUNT
101-111	COMMISSIONERS	569.03
101-120	ELECTIONS	12,758.49
101-130	JUDICIAL SYSTEM	19,175.55
101-143	FINANCE OFFICE	570.91
101-151	STATES ATTORNEY	410.02
101-161	COUNTY BUILDING	1,188.16
101-162	DIRECTOR OF EQUALIZATION	19.46
101-165	VETERAN'S SERVICE	218.55
101-171	INFORMATION TECHNOLOGY	40,040.08
101-172	HUMAN RESOURCES	81.67

** DEPARTMENT TOTALS **

ACCT	NAME	AMOUNT
101-211	SHERIFF'S OFFICE	3,276.91
101-212	COUNTY JAIL	32,806.52
101-213	CORONER	6,925.00
101-214	JUVENILE DETENTION	473.80
101-223	DRAINAGE COMMISSION	20.29
101-411	WELFARE	4,160.03
101-441	BEHAVIORAL HEALTH	1,214.01
101-528	BCOAC	3,026.26
101-611	COUNTY EXTENSION	961.81
101-615	WEED CONTROL	2,150.00
101-711	PLANNING & ZONING	1,392.65
101-712	1ST DISTRICT	11,376.34
101 TOTAL	GENERAL FUND	142,815.54
201-311	HIGHWAY ADMINISTRATION	1,364,810.74
201 TOTAL	ROAD & BRIDGE FUND	1,364,810.74
226-222	EMERGENCY & DISASTER SERV	253.02
226 TOTAL	EMERGENCY MANAGEMENT	253.02
248-212	24/7 PROGRAM	2,806.09
248 TOTAL	24/7 PROGRAM	2,806.09
250-163	ROD Relief Fund	28.55
250 TOTAL	ROD RELIEF FUND	28.55
735	NON-DEPARTMENTAL	799.63
735 TOTAL	DELINQUENT TAXES	799.63
761	NON-DEPARTMENTAL	4,968.95
761 TOTAL	SHERIFF TRUST	4,968.95
	** TOTAL **	1,516,482.52

NO ERRORS

** END OF REPORT **

VENDOR SET: 01 Brookings County ITEMS PRINTED: PAID, UNPAID

PACKET: 02307 July Department of Revenu

FUND : 101 GENERAL FUND

DEPARTMENT: 130 JUDICIAL SYSTEM BANK: ALL

VENDOR	NAME	ITEM #	G/L ACCOUNT	DESCRIPTION	CHECK#	AMOUNT
01-12761	SD DEPT OF REVENUE	I-202007106869	101-4-130-4230	BLOOD TESTS		1,670.00
				DEPARTMENT 130 JUDICIAL SYSTEM	TOTAL:	1,670.00

VENDOR SET: 01 Brookings County ITEMS PRINTED: PAID, UNPAID

PACKET: 02307 July Department of Revenu

FUND : 101 GENERAL FUND

DEPARTMENT: 421 COMMUNITY HEALTH NURSE BANK: ALL

VENDOR	NAME	ITEM #	G/L ACCOUNT	DESCRIPTION	CHECK#	AMOUNT
01-22563	OFFICE OF CHILD & FAMIL	I-202007106868	101-4-421-4290	COMMUNITY HEALTH NURSE		2,671.05
				DEPARTMENT 421 COMMUNITY HEALTH NURSE TOTAL:		2,671.05

VENDOR SET: 01 Brookings County ITEMS PRINTED: PAID, UNPAID

PACKET: 02307 July Department of Revenu

FUND : 101 GENERAL FUND

DEPARTMENT: 441 BEHAVIORAL HEALTH BANK: ALL

VENDOR	NAME	ITEM #	G/L ACCOUNT	DESCRIPTION	CHECK#	AMOUNT
01-12761	SD DEPT OF REVENUE	I-202007106869	101-4-441-4220	HUMAN SERVICES CENTER		791.63
				DEPARTMENT 441 BEHAVIORAL HEALTH	TOTAL:	791.63
				FUND 101 GENERAL FUND	TOTAL:	5,132.68

VENDOR SET: 01 Brookings County ITEMS PRINTED: PAID, UNPAID
PACKET: 02307 July Department of Revenu
FUND : 742 MOTOR VEHICLE
DEPARTMENT: N/A NON-DEPARTMENTAL BANK: ALL

VENDOR	NAME	ITEM #	G/L ACCOUNT	DESCRIPTION	CHECK#	AMOUNT
01-12761	SD DEPT OF REVENUE	I-202007106869	742-2-2090000	MONTHLY MV		654,148.31
				DEPARTMENT 0000 NON-DEPARTMENTAL	TOTAL:	654,148.31
				FUND 742 MOTOR VEHICLE	TOTAL:	654,148.31

VENDOR SET: 01 Brookings County ITEMS PRINTED: PAID, UNPAID
PACKET: 02307 July Department of Revenu
FUND : 763 REGISTER OF DEEDS
DEPARTMENT: N/A NON-DEPARTMENTAL BANK: ALL

VENDOR	NAME	ITEM #	G/L ACCOUNT	DESCRIPTION	CHECK#	AMOUNT
01-12761	SD DEPT OF REVENUE	I-202007106869	763-2-2090000	BIRTH & DEATH FEES		1,430.00
				DEPARTMENT 0000 NON-DEPARTMENTAL	TOTAL:	1,430.00
				FUND 763 REGISTER OF DEEDS	TOTAL:	1,430.00
					REPORT GRA TOTAL:	660,710.99

** G/L ACCOUNT TOTALS **

YEAR	ACCOUNT	NAME	AMOUNT	LINE ITEM ANNUAL BUDGET	LINE ITEM BUDGET AVAILABLE	LINE ITEM OVER BUDG	GROUP BUDGET ANNUAL BUDGET	GROUP BUDGET AVAILABLE	GROUP BUDGET OVER BUDG
2020	101-4-130-4230	BLOOD TESTS	1,670.00	95,000	47,357.38				
	101-4-421-4290	REIMB. TO STATE/NURSE PYMT	2,671.05	10,300	2,286.85				
	101-4-441-4220	PROFESSIONAL SERV. & FEES	791.63	50,000	23,590.90				
	742-2-2090000	AMOUNT HELD FOR MOTOR VEHI	654,148.31						
	763-2-2090000	AMOUNT HELD FOR REGISTER	1,430.00						
		** 2020 YEAR TOTALS	660,710.99						

** DEPARTMENT TOTALS **

ACCT	NAME	AMOUNT
101-130	JUDICIAL SYSTEM	1,670.00
101-421	COMMUNITY HEALTH NURSE	2,671.05
101-441	BEHAVIORAL HEALTH	791.63
101 TOTAL	GENERAL FUND	5,132.68
742	NON-DEPARTMENTAL	654,148.31
742 TOTAL	MOTOR VEHICLE	654,148.31
763	NON-DEPARTMENTAL	1,430.00
763 TOTAL	REGISTER OF DEEDS	1,430.00
	** TOTAL **	660,710.99

NO ERRORS

** END OF REPORT **

VENDOR SET: 01 Brookings County ITEMS PRINTED: PAID, UNPAID

PACKET: 02315 August Cell Phones

FUND : 101 GENERAL FUND

DEPARTMENT: 111 COMMISSIONERS BANK: ALL

VENDOR	NAME	ITEM #	G/L ACCOUNT	DESCRIPTION	CHECK#	AMOUNT
01-11552	JENSEN, LARRY	I-20200804-11552	101-4-111-4280	CELL PHONE REIMBURSEMENT		75.00
01-13058	STEFFENSEN, STACY	I-20200804-13058	101-4-111-4280	CELL PHONE REIMBURSEMENT		105.00
01-20230	BARTLEY, MICHAEL	I-20200804-20230	101-4-111-4280	CELL PHONE REIMBURSEMENT		75.00
01-21131	KROGMAN, RYAN	I-20200804-21131	101-4-111-4280	CELL PHONE REIMBURSEMENT		75.00
01-22022	LEE ANN PIERCE	I-20200804-22022	101-4-111-4280	CELL PHONE REIMBURSEMENT		75.00
01-22467	ANGELA BOERSMA	I-20200804-22467	101-4-111-4280	CELL PHONE REIMBURSEMENT		75.00

DEPARTMENT 111 COMMISSIONERS TOTAL: 480.00

VENDOR SET: 01 Brookings County ITEMS PRINTED: PAID, UNPAID

PACKET: 02315 August Cell Phones

FUND : 101 GENERAL FUND

DEPARTMENT: 120 ELECTIONS BANK: ALL

VENDOR	NAME	ITEM #	G/L ACCOUNT	DESCRIPTION	CHECK#	AMOUNT
01-10451	BUSETH, VICKI	I-20200804-10451	101-4-120-4260	CELL PHONE REIMBURSEMENT		5.25
				DEPARTMENT 120 ELECTIONS	TOTAL:	5.25

VENDOR SET: 01 Brookings County ITEMS PRINTED: PAID, UNPAID
PACKET: 02315 August Cell Phones
FUND : 101 GENERAL FUND
DEPARTMENT: 143 FINANCE OFFICE BANK: ALL

VENDOR	NAME	ITEM #	G/L ACCOUNT	DESCRIPTION	CHECK#	AMOUNT
01-10451	BUSETH, VICKI	I-20200804-10451	101-4-143-4280	CELL PHONE REIMBURSEMENT		99.75
01-22052	JENNIFER BELLER	I-20200804-22052	101-4-143-4280	CELL PHONE REIMBURSEMENT		75.00
				DEPARTMENT 143 FINANCE OFFICE	TOTAL:	174.75

VENDOR SET: 01 Brookings County ITEMS PRINTED: PAID, UNPAID

PACKET: 02315 August Cell Phones

FUND : 101 GENERAL FUND

DEPARTMENT: 151 STATES ATTORNEY BANK: ALL

VENDOR	NAME	ITEM #	G/L ACCOUNT	DESCRIPTION	CHECK#	AMOUNT
01-22464	DAN C NELSON	I-20200804-22464	101-4-151-4280	CELL PHONE REIMBURSEMENT		105.00
01-22547	BENJAMIN KLEINJAN	I-20200804-22547	101-4-151-4280	CELL PHONE REIMBURSEMENT		105.00
01-22561	PAIGE PETERSEN	I-20200804-22561	101-4-151-4280	CELL PHONE REIMBURSEMENT		105.00
				DEPARTMENT 151 STATES ATTORNEY	TOTAL:	315.00

VENDOR SET: 01 Brookings County ITEMS PRINTED: PAID, UNPAID

PACKET: 02315 August Cell Phones

FUND : 101 GENERAL FUND

DEPARTMENT: 161 COUNTY BUILDING BANK: ALL

VENDOR	NAME	ITEM #	G/L ACCOUNT	DESCRIPTION	CHECK#	AMOUNT
01-19787	HEIDEMANN, TERRANCE	I-20200804-19787	101-4-161-4280	CELL PHONE REIMBURSEMENT		15.00
01-22457	JUSTIN JOHNSON	I-20200804-22457	101-4-161-4280	CELL PHONE REIMBURSEMENT		30.00
				DEPARTMENT 161 COUNTY BUILDING	TOTAL:	45.00

VENDOR SET: 01 Brookings County ITEMS PRINTED: PAID, UNPAID

PACKET: 02315 August Cell Phones

FUND : 101 GENERAL FUND

DEPARTMENT: 162 DIRECTOR OF EQUALIZATION BANK: ALL

VENDOR	NAME	ITEM #	G/L ACCOUNT	DESCRIPTION	CHECK#	AMOUNT
01-11666	LARRY KLINGBILE	I-20200804-11666	101-4-162-4280	CELL PHONE REIMBURSEMENT		30.00
01-19564	BREHMER, JACOB	I-20200804-19564	101-4-162-4280	CELL PHONE REIMBURSEMENT		105.00
01-19565	HIEB, JERE	I-20200804-19565	101-4-162-4280	CELL PHONE REIMBURSEMENT		30.00
01-22217	REID SQUIRES	I-20200804-22217	101-4-162-4280	CELL PHONE REIMBURSEMENT		30.00
01-22527	RUSTY BRANDSRUD	I-20200804-22527	101-4-162-4280	CELL PHONE REIMBURSEMENT		30.00

DEPARTMENT 162 DIRECTOR OF EQUALIZATI TOTAL: 225.00

VENDOR SET: 01 Brookings County ITEMS PRINTED: PAID, UNPAID

PACKET: 02315 August Cell Phones

FUND : 101 GENERAL FUND

DEPARTMENT: 163 REGISTER OF DEEDS BANK: ALL

VENDOR	NAME	ITEM #	G/L ACCOUNT	DESCRIPTION	CHECK#	AMOUNT
01-10548	CHAPMAN, BEVERLY	I-20200804-10548	101-4-163-4280	CELL PHONE REIMBURSEMENT		105.00
				DEPARTMENT 163 REGISTER OF DEEDS	TOTAL:	105.00

VENDOR SET: 01 Brookings County ITEMS PRINTED: PAID, UNPAID

PACKET: 02315 August Cell Phones

FUND : 101 GENERAL FUND

DEPARTMENT: 165 VETERAN'S SERVICE BANK: ALL

VENDOR	NAME	ITEM #	G/L ACCOUNT	DESCRIPTION	CHECK#	AMOUNT
01-20191	HOLZHAUSER, MICHAEL	I-20200804-20191	101-4-165-4280	CELL PHONE REIMBURSEMENT		86.10
				DEPARTMENT 165 VETERAN'S SERVICE	TOTAL:	86.10

VENDOR SET: 01 Brookings County ITEMS PRINTED: PAID, UNPAID

PACKET: 02315 August Cell Phones

FUND : 101 GENERAL FUND

DEPARTMENT: 171 INFORMATION TECHNOLOGY BANK: ALL

VENDOR	NAME	ITEM #	G/L ACCOUNT	DESCRIPTION	CHECK#	AMOUNT
01-21618	PLOWMAN, SHAWN	I-20200804-21618	101-4-171-4280	CELL PHONE REIMBURSEMENT		90.00
01-22472	ERIC METTE	I-20200804-22472	101-4-171-4280	CELL PHONE REIMBURSEMENT		75.00
				DEPARTMENT 171 INFORMATION TECHNOLOGY TOTAL:		165.00

VENDOR SET: 01 Brookings County ITEMS PRINTED: PAID, UNPAID

PACKET: 02315 August Cell Phones

FUND : 101 GENERAL FUND

DEPARTMENT: 172 HUMAN RESOURCES BANK: ALL

VENDOR	NAME	ITEM #	G/L ACCOUNT	DESCRIPTION	CHECK#	AMOUNT
01-13422	WITCHEY, KRISTEN	I-20200804-13422	101-4-172-4280	CELL PHONE REIMBURSEMENT		45.00
				DEPARTMENT 172 HUMAN RESOURCES	TOTAL:	45.00

VENDOR SET: 01 Brookings County ITEMS PRINTED: PAID, UNPAID

PACKET: 02315 August Cell Phones

FUND : 101 GENERAL FUND

DEPARTMENT: 211 SHERIFF'S OFFICE BANK: ALL

VENDOR	NAME	ITEM #	G/L ACCOUNT	DESCRIPTION	CHECK#	AMOUNT
01-11156	GIEGLING, MIKE	I-20200804-11156	101-4-211-4280	CELL PHONE REIMBURSEMENT		30.00
01-11248	HAIDER, DARIN	I-20200804-11248	101-4-211-4280	CELL PHONE REIMBURSEMENT		60.00
01-12403	JON PIKE	I-20200804-12403	101-4-211-4280	CELL PHONE REIMBURSEMENT		60.00
01-12861	SEBRING, SCOTT	I-20200804-12861	101-4-211-4280	CELL PHONE REIMBURSEMENT		105.00
01-13030	STANWICK, MARTIN	I-20200804-13030	101-4-211-4280	CELL PHONE REIMBURSEMENT		105.00
01-19787	HEIDEMANN, TERRANCE	I-20200804-19787	101-4-211-4280	CELL PHONE REIMBURSEMENT		15.00
01-20493	KRIESE, JEREMY	I-20200804-20493	101-4-211-4280	CELL PHONE REIMBURSEMENT		30.00
01-21550	LANGSTRAAT, MANUAL	I-20200804-21550	101-4-211-4280	CELL PHONE REIMBURSEMENT		30.00
01-22045	KEVIN MURFIELD	I-20200804-22045	101-4-211-4280	CELL PHONE REIMBURSEMENT		30.00
01-22148	SUZANNE BJORDAL	I-20200804-22148	101-4-211-4280	CELL PHONE REIMBURSEMENT		30.00
01-22363	DANE LARSEN	I-20200804-22363	101-4-211-4280	CELL PHONE REIMBURSEMENT		30.00
01-22506	JEFFREY CONRAD	I-20200804-22506	101-4-211-4280	CELL PHONE REIMBURSEMENT		30.00
01-22507	CODY SUNDERLAND	I-20200804-22507	101-4-211-4280	CELL PHONE REIMBURSEMENT		30.00
01-22508	BRYAN SCHREUR	I-20200804-22508	101-4-211-4280	CELL PHONE REIMBURSEMENT		30.00
01-22634	TARA RODRIGUEZ	I-20200804-22634	101-4-211-4280	CELL PHONE REIMBURSEMENT		30.00
01-22651	THOMAS CHESTER	I-20200804-22651	101-4-211-4280	CELL PHONE DISTRIBUTION		30.00

DEPARTMENT 211 SHERIFF'S OFFICE TOTAL: 675.00

VENDOR SET: 01 Brookings County ITEMS PRINTED: PAID, UNPAID

PACKET: 02315 August Cell Phones

FUND : 101 GENERAL FUND

DEPARTMENT: 212 COUNTY JAIL BANK: ALL

VENDOR	NAME	ITEM #	G/L ACCOUNT	DESCRIPTION	CHECK#	AMOUNT
01-13118	SWEEBE, BART	I-20200804-13118	101-4-212-4280	CELL PHONE REIMBURSEMENT		105.00
01-21450	BITELER, DAVID	I-20200804-21450	101-4-212-4280	CELL PHONE REIMBURSEMENT		30.00
				DEPARTMENT 212 COUNTY JAIL	TOTAL:	135.00

VENDOR SET: 01 Brookings County ITEMS PRINTED: PAID, UNPAID

PACKET: 02315 August Cell Phones

FUND : 101 GENERAL FUND

DEPARTMENT: 213 CORONER BANK: ALL

VENDOR	NAME	ITEM #	G/L ACCOUNT	DESCRIPTION	CHECK#	AMOUNT
01-22019	HIEB, RICHARD	I-20200804-22019	101-4-213-4280	CELL PHONE REIMBURSEMENT		30.00
				DEPARTMENT 213 CORONER	TOTAL:	30.00

VENDOR SET: 01 Brookings County ITEMS PRINTED: PAID, UNPAID

PACKET: 02315 August Cell Phones

FUND : 101 GENERAL FUND

DEPARTMENT: 411 WELFARE BANK: ALL

VENDOR	NAME	ITEM #	G/L ACCOUNT	DESCRIPTION	CHECK#	AMOUNT
01-20191	HOLZHAUSER, MICHAEL	I-20200804-20191	101-4-411-4280	CELL PHONE REIMBURSEMENT		18.90
01-22430	EILEEN ABERLE	I-20200804-22430	101-4-411-4280	CELL PHONE REIMBURSEMENT		45.00
				DEPARTMENT 411 WELFARE	TOTAL:	63.90

VENDOR SET: 01 Brookings County ITEMS PRINTED: PAID, UNPAID

PACKET: 02315 August Cell Phones

FUND : 101 GENERAL FUND

DEPARTMENT: 528 BCOAC BANK: ALL

VENDOR	NAME	ITEM #	G/L ACCOUNT	DESCRIPTION	CHECK#	AMOUNT
01-20804	HUBER, DUSTIN	I-20200804-20804	101-4-528-4280	CELL PHONE REIMBURSEMENT		105.00
				DEPARTMENT 528 BCOAC	TOTAL:	105.00

VENDOR SET: 01 Brookings County ITEMS PRINTED: PAID, UNPAID

PACKET: 02315 August Cell Phones

FUND : 101 GENERAL FUND

DEPARTMENT: 615 WEED CONTROL BANK: ALL

VENDOR	NAME	ITEM #	G/L ACCOUNT	DESCRIPTION	CHECK#	AMOUNT
01-14512	DENNIS CARMICHAEL	I-20200804-14512	101-4-615-4280	CELL PHONE REISMBURSEMENT		30.00
01-21197	MOSER, MISTY	I-20200804-21197	101-4-615-4280	CELL PHONE REIMBURSEMENT		75.00
				DEPARTMENT 615 WEED CONTROL	TOTAL:	105.00

VENDOR SET: 01 Brookings County ITEMS PRINTED: PAID, UNPAID

PACKET: 02315 August Cell Phones

FUND : 101 GENERAL FUND

DEPARTMENT: 711 PLANNING & ZONING BANK: ALL

VENDOR	NAME	ITEM #	G/L ACCOUNT	DESCRIPTION	CHECK#	AMOUNT
01-11308	RICHARD HAUGEN	I-20200804-11308	101-4-711-4280	CELL PHONE REIMBURSEMENT		45.00
01-11365	HILL, ROBERT	I-20200804-11365	101-4-711-4280	CELL PHONE REIMBURSEMENT		26.25
				DEPARTMENT 711 PLANNING & ZONING	TOTAL:	71.25
				FUND 101 GENERAL FUND	TOTAL:	2,831.25

VENDOR SET: 01 Brookings County ITEMS PRINTED: PAID, UNPAID

PACKET: 02315 August Cell Phones

FUND : 201 ROAD & BRIDGE FUND

DEPARTMENT: 311 HIGHWAY ADMINISTRATION BANK: ALL

VENDOR	NAME	ITEM #	G/L ACCOUNT	DESCRIPTION	CHECK#	AMOUNT
01-10106	ANDERSON, JEFFREY G	I-20200804-10106	201-4-311-4280	CELL PHONE REIMBURSEMENT		75.00
01-11118	FRIEDRICH, CLIFF	I-20200804-11118	201-4-311-4280	CELL PHONE REIMBURSEMENT		45.00
01-11226	GROSS, LINDA	I-20200804-11226	201-4-311-4280	CELL PHONE REIMBURSEMENT		30.00
01-22455	DAVE BUBLITZ	I-20200804-22455	201-4-311-4280	CELL PHONE REIMBURSEMENT		45.00
01-22456	BRIAN GUSTAD	I-20200804-22456	201-4-311-4280	CELL PHONE REIMBURSEMENT		105.00

DEPARTMENT 311 HIGHWAY ADMINISTRATION TOTAL: 300.00

FUND 201 ROAD & BRIDGE FUND TOTAL: 300.00

VENDOR SET: 01 Brookings County ITEMS PRINTED: PAID, UNPAID

PACKET: 02315 August Cell Phones

FUND : 226 EMERGENCY MANAGEMENT

DEPARTMENT: 222 EMERGENCY & DISASTER SERV BANK: ALL

VENDOR	NAME	ITEM #	G/L ACCOUNT	DESCRIPTION	CHECK#	AMOUNT
01-11365	HILL, ROBERT	I-20200804-11365	226-4-222-4280	CELL PHONE REIMBURSEMENT		78.75
				DEPARTMENT 222 EMERGENCY & DISASTER S TOTAL:		78.75
				FUND 226 EMERGENCY MANAGEMENT TOTAL:		78.75
				REPORT GRA TOTAL:		3,210.00

** G/L ACCOUNT TOTALS **

YEAR	ACCOUNT	NAME	AMOUNT	LINE ITEM ANNUAL BUDGET	LINE ITEM BUDGET AVAILABLE	LINE ITEM OVER BUDG	GROUP BUDGET ANNUAL BUDGET	GROUP BUDGET AVAILABLE	GROUP BUDGET OVER BUDG
2020	101-4-111-4280	UTILITIES	480.00	5,760	1,920.00				
	101-4-120-4260	ELECTION SUPPLIES	5.25	15,000	6,764.01				
	101-4-143-4280	UTILITIES	174.75	2,800	1,136.75				
	101-4-151-4280	TELEPHONE	315.00	5,000	2,480.00				
	101-4-161-4280	UTILITIES/COURTHOUSE	45.00	53,000	30,517.17				
	101-4-162-4280	TELEPHONE	225.00	2,700	900.00				
	101-4-163-4280	TELEPHONE	105.00	1,260	420.00				
	101-4-165-4280	TELEPHONE	86.10	1,200	511.20				
	101-4-171-4280	UTILITIES & TELEPHONE	165.00	1,980	660.00				
	101-4-172-4280	UTILITIES & TELEPHONE	45.00	540	225.00				
	101-4-211-4280	UTILITIES	675.00	20,000	7,089.67				
	101-4-212-4280	UTILITIES	135.00	42,000	22,607.89				
	101-4-213-4280	TELEPHONE	30.00	360	120.00				
	101-4-411-4280	TELEPHONE	63.90	1,000	488.80				
	101-4-528-4280	UTILITIES	105.00	40,000	23,139.05				
	101-4-615-4280	TELEPHONE	105.00	2,500	1,573.48				
	101-4-711-4280	TELEPHONE	71.25	900	330.00				
	201-4-311-4280	UTILITIES	300.00	30,000	12,936.20				
	226-4-222-4280	TELEPHONE	78.75	1,000	370.00				
		** 2020 YEAR TOTALS	3,210.00						

** DEPARTMENT TOTALS **

ACCT	NAME	AMOUNT
101-111	COMMISSIONERS	480.00
101-120	ELECTIONS	5.25
101-143	FINANCE OFFICE	174.75
101-151	STATES ATTORNEY	315.00
101-161	COUNTY BUILDING	45.00
101-162	DIRECTOR OF EQUALIZATION	225.00
101-163	REGISTER OF DEEDS	105.00
101-165	VETERAN'S SERVICE	86.10
101-171	INFORMATION TECHNOLOGY	165.00
101-172	HUMAN RESOURCES	45.00
101-211	SHERIFF'S OFFICE	675.00
101-212	COUNTY JAIL	135.00
101-213	CORONER	30.00
101-411	WELFARE	63.90
101-528	BCOAC	105.00

** DEPARTMENT TOTALS **

ACCT	NAME	AMOUNT
101-615	WEED CONTROL	105.00
101-711	PLANNING & ZONING	71.25
101 TOTAL	GENERAL FUND	2,831.25
201-311	HIGHWAY ADMINISTRATION	300.00
201 TOTAL	ROAD & BRIDGE FUND	300.00
226-222	EMERGENCY & DISASTER SERV	78.75
226 TOTAL	EMERGENCY MANAGEMENT	78.75
	** TOTAL **	3,210.00

NO ERRORS

** END OF REPORT **

July 21, 2020 thru July29, 2020

Highway Department

- 06-169-138 (north) on BC 77. Bent 3 piling completed July 28, 2020, concrete footings and columns to follow. Anticipating completing Bent 3 columns and cap early this week. Thereafter Bent 2 construction will begin with removing the coffer dam on Bent 3 and begin installing coffer dam on Bent 2.

- 06-169-139 (south), structure is completed. Approach grading is needed.

- Brookings County Road 46 or 209th Street, the South Dakota Department of Transportation will be conducting an epoxy deck seal project on the bridge that passes over I-29. Initial Grinding to take place on July 29, 2020; temporary lane closures will be in effect at times when they are grinding and the bridge will be fully open to traffic at night. To follow traffic control plans are in place to ensure safe passage when a 2 to 3 day single lane closure is in effect.

- Brookings County Road 8 or 207th Street, the South Dakota Department of Transportation will be conducting an epoxy deck seal a project on the bridge that passes over I-29. Schedule to be determined.

    - The SDDOT will be administering and paying for the projects from SDDOT funds, it just so happen to affect the Brookings County traveling public.

- July 23, 2020 met with Township Supervisors from Parnell & Elkton Townships, Moody County Highway Superintendent, and the owners of Golden Dakota Farms LLC dairy located in Moody County in regards to a permanently buried manure transfer line being installed by Golden Dakota Farms LLC that passes thru the above mentioned governmental jurisdictions. The installation of this particular transfer line will not be within the ROW lines of any of the entities aside from where the line crosses under the roads, when boring the road excavation will not take place within ROW's of Township or County jurisdiction, easements have been granted between the private landowners and Golden Dakota Farms LLC. Measures were taken by Golden Dakota Farms LLC above and beyond what was required by the South Dakota DENR, one particular measure is dual wall Yelomine PVC pipe will extend 25' outside the ROW lines when boring thru ROW, and the typical line itself will maintain 25' outside the ROW on private land. As a side note the line will also be incased by dual wall when crossing any major drainage extending 200' from the centerline of the drainage on either side. The line itself will maintain a minimum subsurface depth 10 feet. The line will run easterly along 220th St. which is the Brookings/Moody County line on the north side or Brookings County side due to utility locations on the south side or Moody County side. The line will intersect 2 Brookings County Roads, BC 31 and BC 33. The line will follow 220th St. to the South Dakota/Minnesota boarder.

- Brookings 2020 Chip Seal, commenced on Thursday July 30, 2020. Please see attached map.

- Submitted 3 Big Grant Applications for Preliminary Engineering to the SDDOT on July 31, 2020.
    - 06-220-089, Resolution #20-25
    - 06-301-110, Resolution #20-26
    - 06-306-110, Resolution #20-27
        - Consideration by the SDDOT Transportation Commission will be before the end of August.

422 Western Ave • Brookings, South Dakota • 57006 • Phone: (605) 696-8270 • Fax: (605) 696-8278 •
◆Website: http://www.brookingscountysd.gov

- Brookings County 2020 Asphalt surfacing project:
  - Mile Stone #1. Notice to proceed issued June 15, 2020 Substantial Completion certificate issued June 25, 2020
    - BC Road 6 between BC 77 & BC 7, asphalt milling and 2" asphalt surfacing completed.
    - Brookings County Crews have finished dressing the shoulders and tying back into township roads, residential, and farm & field entrances.

  - Mile Stone #2. Notice to Proceed issued June 25, 2020
    - BC Road 4 between US 81 and BC 5, asphalt milling completed. 2" asphalt surfacing has been completed as of July 17, 2020. Substantial completion certificate issued as of July 20, 2020.
    - Brookings County Crews have finished dressing the shoulders and tying back into township roads, residential, and farm & field entrances.

  - Mile Stone #3, Notice to Proceed issued July 20, 2020
    - BC Road 8 between US 81 and BC 1, asphalt milling completed. 2" asphalt surfacing has been completed as of July 27, 2020. Substantial completion certificate issued July 28, 2020.
    - July 27, 2020 Brookings County Crews began dressing the shoulders and tying back into township roads, residential, and farm & field entrances. We are anticipating completing that by July 30, 2020.

  - Brookings 2020 Chip Seal, commenced on Thursday July 30, 2020. Please see attached map.

- Submitted 3 Big Grant Applications for Preliminary Engineering to the SDDOT on July 31, 2020.
  - 06-220-089, Resolution #20-25
  - 06-301-110, Resolution #20-26
  - 06-306-110, Resolution #20-27
    - Consideration by the SDDOT Transportation Commission will be before the end of August.

- Side Dump Trailer quotations, please see attached documents.

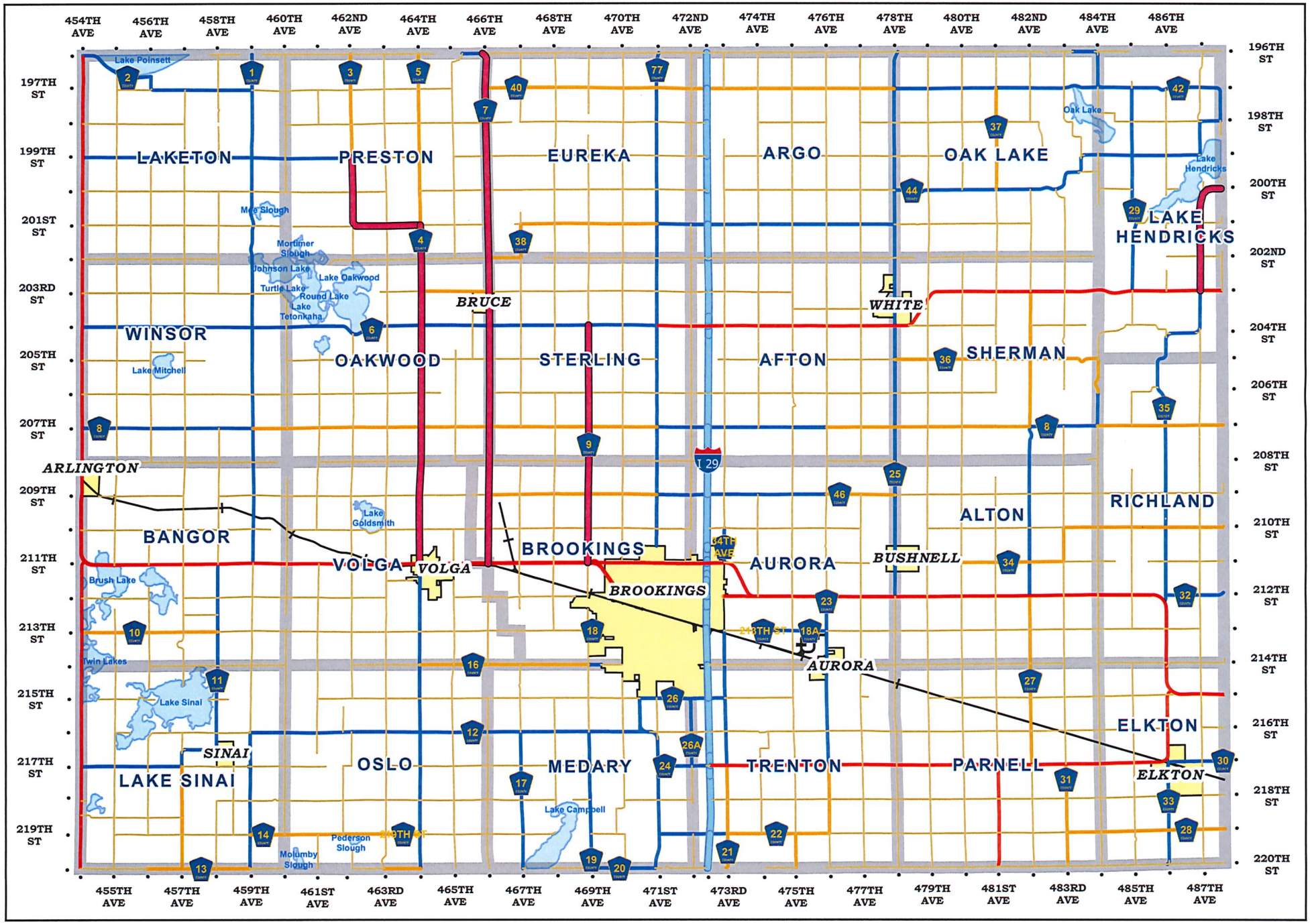

Township Roads
Interstate 29
Townships
State Highways
Railroad
Lakes
US Highways
City Limits
ChipSeal

Brookings County Projects
Chip Seal

July 2020

June 23, 2020

MACHINE SPECIFICATIONS

TK60SSD-43	SUSPENSION: 49"/50" SPACING
TK60SSD-43 STEEL SIDE DUMP	21K STD LIFE BRAKES W/6"AUTOSLAC
48" 5TH WHEEL HEIGHT	STANDARD AXLE
STANDARD KINGPIN	2S1M ANTI-LOCK BRAKE SYSTEM
OVERALL LENGTH - 42'11"	STEEL HUB-PILOTED-CAST DRUM
OVERALL WIDTH - 102"	8.25X22.5 STEEL WHEELS (INSIDE)
TUB LENGTH - 36'	8.25X22.5 STEEL WHEELS (OUTSIDE)
CAPACITY (WATER LEVEL) 23 CU YD	11R22.5 TIRES 14PLY
CAPACITY (FULL) 31 CU YD	PLASTIC FRONT FENDERS
TUB SHEETS: .250 ABRASION RESIST	PLASTIC REAR FENDERS
TUB CNTRLS: TRAILER MOUNTED VLV	STANDARD MUDFLAPS
WIRED REMOTE	TOP CYLINDER REMOTE GREASE LINE
HEAVY DUTY PUSH BLOCK	DOCUMENT HOLDER 4 1/2" ROUND
NO PUP CONTROLS	NO TARP
TRI AXLE:23K AIR RIDE W/REARLIFT	GREY S7230 W/BLACK DECALS

SELL PRICE	49,883.56
NET TRADE DIFFERENCE	49,883.56
AFTER TAX BALANCE	49,883.56

We believe the equipment as quoted will exceed your expectations. Thank you for the opportunity to quote this equipment.

Sincerely,

Jon Snedeker
Machine Sales Representative JonSnedeker@butlermachinery.com
605-251-3080

North American Trailer
PARTS • SERVICE • SALES

11015 Clark Road
Inver Grove Heights, MN 55077
EMAIL: sales@natrailer.com
Phone: 651-450-9109 Fax: 651-450-9327

MAC LTT · MAC Trailer · CIMC VANGUARD · FONTAINE TRAILER · FONTAINE HEAVY-HAUL

SALESMAN	DOUG NORGAARD		
BUYER'S NAME	Brookings County Highway Dept.	Date	7/23/2020
STREET ADDRESS	422 Western Ave.	PHONE NUMBER	605-696-8270
CITY, STATE, ZIP	Brookings, SD 57006	FAX NUMBER	
EMAIL ADDRESS	-	CELL PHONE NUMBER	

PLEASE ENTER MY ORDER FOR NEW [X] USED [ ] **AS FOLLOWS:**

YEAR	MAKE	MODEL	TYPE	STOCK NUMBER	DELIVER ON OR ABOUT
2021	Midland	TW3000	Side Dump		

SERIAL NUMBER (S) : (BELOW)

N/A

If tax exempt, why?	
Tax Exempt #	
Prorate - Yes or No	
Prorate Number	
Lienholder - Yes or No?	
If yes, Name of lienholder	
Address of lienholder	
City, State, Zip Code	
Date of loan	
MN DL # / DOB	
MN DL # / DOB	

2021 Midland Side Dump
46' TW3000
1/4" HX450 Material
36' Tub - 40" sides
Air Ride suspension
rear axle lift
two speed landing gear
Bolt on Rear Push Block
10- 11R22.5 Tires
4- white inner wheels
6- Alum outer wheels
Unimount hub and drums
3- 25000# Axles
Mesh Tarp
Full Flap Kit

Base Price	$	49,655.00
Freight	$	
F.E.T.	$	
MN SALES Tax	$	
Minnesota Transit Tax	$	
Admin Fees	$	70.00
Options	$	
Price per unit	$	49,725.00
Quantity		1
Total Purchase Amount	$	49,725.00
Trade - in(s) (see below)	$	
Trade Pay Off	$	
Deposit	$	
Balance Due	$	49,725.00

USED EQUIPMENT TRADE IN

YEAR	MAKE	MODEL

S/N

DOT NUMBER
DOT NAME
ADDRESS
City, ST, Zip

TERMS AND CONDITIONS:

Buyer hereby agrees to purchase the above items on the terms stated. The provisions printed on the front and back of this instrument comprise the entire agreement affecting this purchase transaction. No other agreement or understanding of any nature concerning same has been made or entered into, or will be recognized. Modifications to this agreement must be in writing and signed by each party. Buyer hereby certifies that no credit has been extended to Buyer for the purchase of the vehicle(s) except as appears in writing on the face of this agreement. The signor for Buyer certifies that he/she is 18 years of age, or older, and acknowledge receipt of a copy of this order. The terms of this contract of sale were agreed upon and the contract signed in this dealership on the date noted at the top of this form. If credit is involved, this order is not valid in conjunction with a credit sale until a credit disclosure is made as described in regulation "Z" and the Buyer accepts the credit extended.

Accepted X _____ X _____
This order is not valid unless signed and accepted by a Sales Manager or Officer of the Company (Buyer's Signature)

NO WARRANTY ON USED EQUIPMENT

ADDITIONAL TERMS AND CONDITIONS

1. As used in this Order the terms (a) "Dealer" shall mean the authorized Dealer to whom this Order is address and who shall become a party hereto by its acceptance hereof, (b) "Buyer" shall mean the party executing this Order as such on the face hereof, (c) "Manufacturer" shall mean the party that manufactured the Vehicle, (d) "Vehicle" shall mean motor vehicle(s), trailer(s), chassis and attachments thereto. It is understood by Buyer and Dealer that Dealer is in no respect the agent of Manufacturer, that Dealer and Buyer are the sole parties to this Order and that reference to Manufacturer herein is for the purpose of explaining generally certain contractual relationships existing between Dealer and Manufacturer with respect to a new Vehicle.

2. Manufacturer has reserved the right to change the price to Dealer of new Vehicles without notice. In the event the price to Dealer of a new Vehicle of the series and body type ordered hereunder is changed by Manufacturer prior to delivery of the new Vehicle ordered hereunder to Buyer, Dealer reserves the right to change the cash delivered price of such Vehicle to Buyer accordingly. If such cash delivered price is increased by Dealer, Buyer may, if dissatisfied therewith, cancel this Order prior to the earlier of 10 days after Buyer is given notice of the price change or delivery of the new Vehicle to Buyer. In the event of such a cancellation, if a used Vehicle has been traded in as a part of the consideration for such new Vehicle, such used Vehicle shall be returned to Buyer upon payment of a reasonable charge for storage and repairs (if any) or, if such used Vehicle has been previously sold by Dealer, the amount received therefor, less a selling commission of 15% and any expense incurred in storing, insuring, conditioning or advertising said used Vehicle for sale, shall be returned to Buyer.

3. When a used Vehicle to be traded in as a part of the consideration for the Vehicle ordered hereunder is delivered to Dealer, the used Vehicle shall be reappraised and such reappraised value shall determine the allowance made for such used Vehicle. If such reappraised value is lower than the original allowance therefor shown on the front of this Order, Buyer may, if dissatisfied therewith, object and if the original allowance is not provided Buyer may cancel this Order, provided, however, that such right to cancel is exercised prior to the delivery of the Vehicle ordered hereunder to the Buyer.

4. Buyer agrees to deliver to Dealer satisfactory evidence of title to any used Vehicle traded in as a part of the consideration for the Vehicle ordered hereunder at the time of delivery of such used Vehicle to Dealer. Buyer warrants any such used Vehicle to be Buyer's property free and clear of all liens and encumbrances except as otherwise expressly noted in this Order.

5. Unless this Order shall have been cancelled by Buyer under and in accordance with provisions of paragraph 2 or 3 above, Dealer shall have the right, upon failure or refusal of Buyer to accept delivery of the Vehicle ordered hereunder and to comply with the terms of this Order, to retain as liquidated damages any cash deposit made by Buyer, and, in the event a used Vehicle has been traded in as a part of the consideration for the Vehicle ordered hereunder, to sell such used Vehicle and reimburse Dealer out of the proceeds of such sale for the expenses specified in paragraph 2 above and for such other expenses and losses as Dealer may incur or suffer as a result of such failure or refusal by Buyer.

6. Manufacturer has reserved the right to change the design of any Vehicle, accessories or parts thereof at any time without notice and without obligation to make the same or any similar change upon any Vehicle, accessories or parts thereof previously purchased by or shipped to Dealer or being manufactured or sold in accordance with Dealer's orders. Correspondingly, in the event of any such change by Manufacturer, Dealer shall have no obligation to Buyer to make the same or any similar change in any Vehicle, accessories or parts thereof covered by this Order either before or subsequent to delivery thereof to Buyer. In the case of such a material change, Buyer shall have the right to cancel Buyer's order for the Vehicle hereunder prior to the earlier of 10 days after Buyer is given notice of the new design or delivery of the items to Buyer. In the event of such a cancellation, matters relating to a used Vehicle traded in as part of the consideration for the new Vehicle ordered shall be governed by the order cancellation terms in Section 2 above.

7. Dealer shall not be liable for failure to deliver or delay in delivering the Vehicle covered by this Order where such failure or delay is due, in whole or part, to any cause beyond the control or without the fault or negligence of Dealer. Delivery dates stated are estimates.

8. The price for the Vehicle specified on the face of this Order does not include any excise taxes, sales taxes, use taxes or occupational taxes based on sales volume (Federal, State or Local) except as such amounts are itemized on the face hereof. Buyer assumes and agrees to pay, unless prohibited by law, any and all such taxes imposed on or applicable to the transaction covered by this Order, regardless of which party may have primary tax liability therefor.

9. *MANUFACTURER'S WARRANTY:* THE PRINTED MANUFACTURER'S WARRANTY DELIVERED TO BUYER WITH THE VEHICLE ORDERED BY BUYER IS A CONTRACT SOLELY BETWEEN THE MANUFACTURER AND THE BUYER. DEALER IS NOT A PARTY TO SUCH CONTRACT AND SUCH WARRANTY IS NOT A PART OF THE SALE OR BARGAIN BETWEEN THE BUYER AND DEALER.
PROVISIONS APPLICABLE TO SALE OF USED VEHICLE-FACTORY WARRANTY: IF A MANUFACTURER'S PRINTED WARRANTY IS DELIVERED WITH THE VEHICLE ORDERED BY BUYER, SUCH WARRANTY IS A CONTRACT SOLELY BETWEEN THE MANUFACTURER AND THE BUYER. DEALER IS NOT A PARTY TO SUCH CONTRACT AND SUCH WARRANTY IS NOT A PART OF THE SALE OR BARGAIN BETWEEN BUYER AND DEALER.

10. Except as may be otherwise specifically provided in writing on the face of this Order or in a separate writing furnished to Buyer by Dealer, each Vehicle, new or used, sold to Buyer by Dealer under this Order is sold **"AS IS", WITH ALL FAULTS,** without any guarantee or warranty and with Dealer disclaiming and Buyer waiving any and all express or implied warranties, including any implied warranty of merchantability or fitness for a particular purpose, as to the condition of the Vehicle, including all parts and accessories.

11. Buyer agrees to indemnify and hold Dealer harmless from all liability, damages, losses, expenses, claims, or causes of action arising from use or resale of the Vehicle, whether arising from Buyer's or third party claims.

12. Buyer, before or at the time of delivery of the Vehicle covered by this Order, agrees to execute such other forms of agreements or documents as may be required by the terms and conditions of payment indicated on the front of this Order.

_____ **(BUYER INITIAL HERE)** I certify that I have read and agree to these ADDITIONAL TERMS AND CONDITIONS.

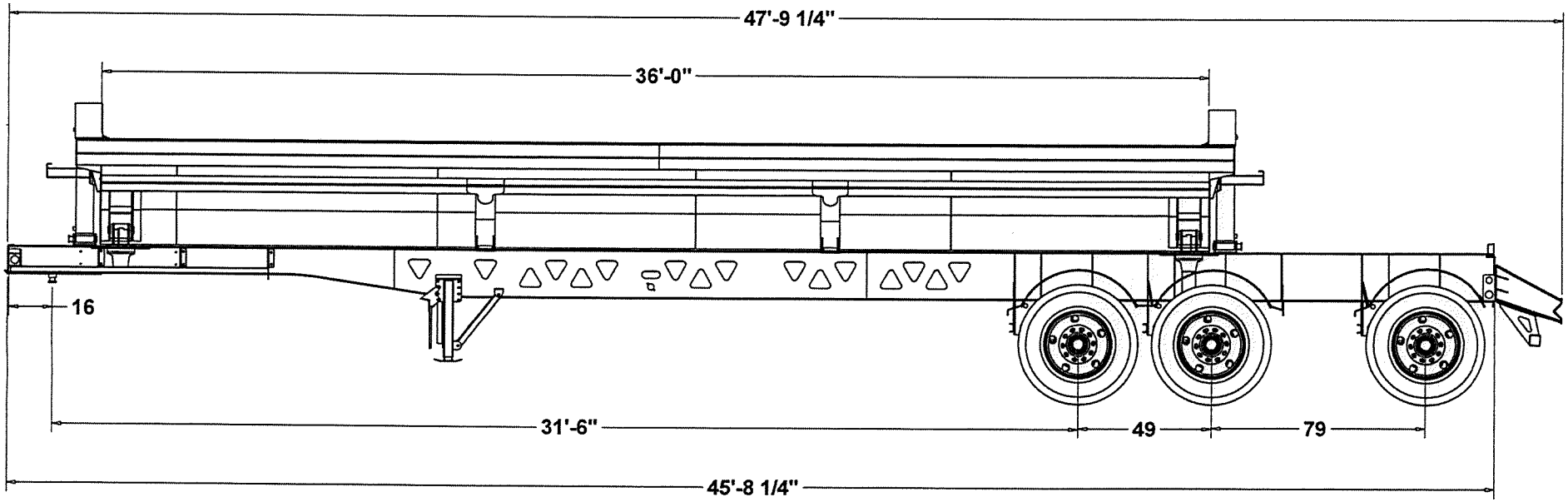

Fieldland MANUFACTURING LIMITED

DRAWN BY: Jake

DATE: 11/6/2019

TITLE:

DESCRIPTION:

PART NO:

46' TW3000 49 79 Spread 40 Side 36 Tub

STANDARD SPECIFICATIONS

- Two-way Tipping Body
- ¼" HX450 Body 36' Elliptical
- 40" Sides
- Composite Bushings (Greaseless)
- Black UHMW Front Fenders
- Black UHMW Round Rear Fenders
- HN06 11R22.5 Tires
- Steel Unimount Wheels
- Auto Slacks
- Haldex ABS (2S1M)
- Internal Common Ground Harness
- 50% Conspicuity Tape
- Accent Striping (Double 1" Tape)
- Two Way Valve c/w in Cab Control
- Bolt-on Step Bumper
- LED Lighting

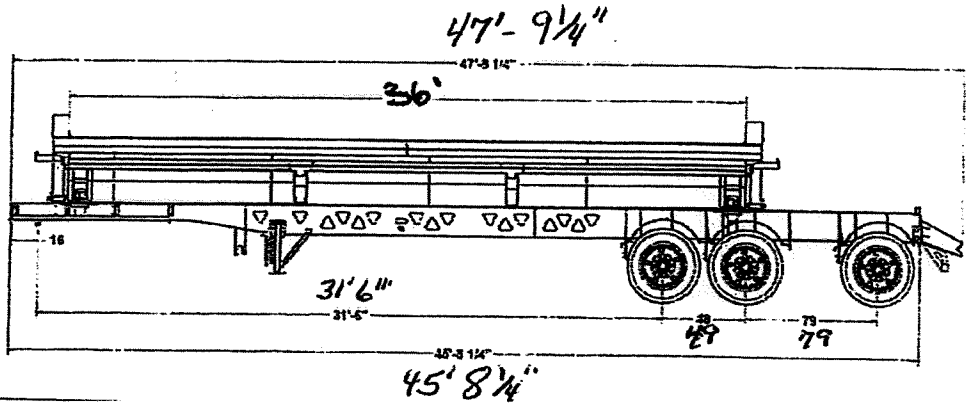

MIDLAND SIDE DUMP 46' TW3000

TWO SPEED LANDING GEAR

RIDEWELL 260 SUSPENSION AIR RIDE

BOLT ON PUSH BLOCK c/w UNDER RUN BUMPER

MANUAL LIFT AXLE KIT

REAR AXLE (3rd) LIFT KIT

UNIMOUNT HUB, DRUM (w/long studs)

(10) 11R22.5 TIRES

(4) 22.5 WHITE STEEL WHEELS (inner)

(6) 22.5 ALUM WHEELS (outer)

(3) 25,000# AXLES

SIDEKICK POWER TARP (allows for 2 way dumping)

MESH TARP

TARP LOCKOUT

FULL FLAP KIT

TRANSOURCE
TRUCK & EQUIPMENT

SIOUX FALLS	RAPID CITY	ABERDEEN
901 E 60th St N	1810 Deadwood Ave	38490 Hwy 12
Sioux Falls, SD 57104	Rapid City, SD 57702	Aberdeen, SD 57401
(605) 336-2000	(605) 342-5694	(605) 229-0237

SALES • RENTAL • SERVICE • PARTS

DATE: 7/15/20

SOLD TO: Brookings Co
Brookings South Dakota

SHIP TO:

Stock #	Description	Amount
181914	2021 Jet Side Dump trailer s/n 5JNSS453 7 MH000080	$49,900.00
	Triple axel 49" Space	
	Landing leg (non-load bearing)	
	Air ride suspension	
	Front and rear fenders	
	ABS 2S 1M system	
	King pin setting 18" King pin height 48"	
	Frame - black	
	Tub - slate grey	
	22.5 x 8.25 steel wheels	
	11 x 22.5 radio tires	
	NO TARP	

F.O.B.	SF Yard			SubTotal	$49,900.00
Tax Exempt	✔	Tax Jurisdication	Sales Tax Rate	0.0%	$0.00
				Total	$49,900.00

Payment Terms: Cash

☐ AS IS NO WARRANTY ✔ WARRANTY TERMS: STD

Customer hereby acknowledges having received a full, true and complete copy of foregoing contract.
This order is subject to the conditions on the back hereof.

Accepted this 15 day of July, 20 20

Signature:
Print: Brookings Co

TRANSOURCE TRUCK AND EQUIPMENT INC

Signature: Keith Dedrickson
Print: Keith Dedrickson

Terms and Conditions

All Equipment is guaranteed to be as represented only by printed matter pertaining to it published by the manufacturer.

Title and right to physical possession of merchandise covered by this order shall remain in Transource Truck and Equipment Inc. (TTE) until purchase price shall have been paid in full. If purchaser fails or refuses to pay any amount when due under this contract or relinquishes possession of all or any part of this merchandise voluntarily, or involuntarily, then all unpaid amounts become due forthwith and seller may repossess the merchandise wherever found, and shallnot be liable, in any action for such repossession nor for the payment of any money or moneys that have beenpaid in part payment for said merchandise, and any so paid shall be considered as compensation only for the use wear and tear on such merchandise. Deferred payments are to be evidenced by notes bearing 18% interest. Payments not made when due bear interest of 1.5% per month and costs of collection. Orders are not binding upon the seller unless and until approved in writing by and at the sellers's office by an officer of the company as shipped. All shipments are at buyer's risk, and seller's responsibility ceases upon issuance of bill of lading at loading points. All quotations, agreements and contracts are contingent upon mill conditions, strikes, fires, accidents,
Delays of carriers, or any other cause unavoidable or beyond seller's control and seller is not responsible for delays arising therefrom.

The purchaser agrees that TTE, incurs no liability on account of defective material other than any liability of the manufacturer involved, and that all claims for defective material will be presented only to the manufacturer. TTE however, agrees to assist the purchaser in presenting any reasonable claim to the manufacturer. The purchaser agrees that no payment for equipment will be delayed awaiting settlement of any such claim.
Neither TTE, nor the manufacturer are liable for the cost of repairs made outside of the factory without specific written approval of TTE or the manufacturer.

No person has an authority to obligate TTE by any terms, representations, stipulations or conditions not expressed in writing.

Memo:
The SDDOT staff is designing the pavement thicknesses for the 20th Street South BUILD Project. They have requested that the County of Brookings and City of Brookings select the type of pavement they prefer for their respective segments. The SDDOT is recommending concrete pavement for the segment of 20th Street South approximately 660' west of the southbound ramps to 660' east of the northbound ramps. The approximate thicknesses of each pavement option are:

- 5.5" of asphalt pavement on 12" of gravel base course
- 8" of concrete pavement on 5" of gravel base course

This agenda item will involve selecting the pavement preference for the segment of 20th Street South between 660' east of the future northbound ramps to 34th Avenue.

Jackie Lanning, PE
Brookings City Engineer
520 Third Street - Suite 140
Brookings, SD 57006
Phone: (605) 692-6629
Fax: (605) 697-8624
E-mail: jlanning@cityofbrookings.org

brookings
SOUTH DAKOTA
BRING YOUR DREAMS.

EASEMENT FOR USE OF

COUNTY ROAD RIGHT-OF-WAY

THIS EASEMENT AGREEMENT is made and entered into between BROOKINGS COUNTY, SOUTH DAKOTA, a South Dakota public corporation (hereinafter "County") and GOLDEN DAKOTA FARMS LLC. (hereinafter "Easement Tenant".)
Company Name

Name: NICO COETZEE Address: 48188 221 STREET City: ELKTON

Landline: 605 997-5059 Mobil: 620 451 1892 Email: KSDAIRY@RLD.COM

RECITALS:

WHEREAS, Easement Tenant, operates a Concentrated Animal Feeding Operation, located in Section 3, Township SPRINGCREEK, Range 10848, ~~Brookings County~~, Moody County South Dakota; and

WHEREAS, as part of its manure disposal system, Easement Tenant uses hoses or pipe to transport manure to other locations for purposes of treatment or disposal; and

WHEREAS, Easement Tenant desires to place one of its manure hoses or pipes across the right-of-way and under the road surface of Brookings County Road 31/483 at the location as shown in Exhibit "A", attached hereto and by this reference incorporated herein; and

WHEREAS, County is willing to grant to Easement Tenant an Easement for the use of such right-of-way for such purposes on the terms and conditions as hereafter set forth.

THEREFORE, in consideration of the mutual agreements herein set forth, the Parties agree as follows:

1. County does hereby grant to Easement Tenant the non-exclusive right to use the Brookings County Road 31/483 right-of-way for the purposes of placing a manure disposal hose or pipe at the location identified in Exhibit "A" under the following conditions:
   a. The exact location and manner of placing the culvert for such manure hose or pipe shall be as approved by the Brookings County Highway Superintendent;
   b. The culvert shall be a minimum size of N. A.;
   c. The culvert shall be (X bored under) (____ trenched under) the road surface;
   d. The Easement Tenant shall pay all costs for the installation of such culvert and manure hose or pipe;
   e. The culvert and manure hose or pipe shall be placed so as to prevent the manure from entering areas of drainage and the culvert shall be sloped so that the manure will flow to one end in the event of a leak;
   f. The Easement Tenant shall at all times at its sole cost properly maintain the manure hose of pipe and culvert so as to prevent leaks;
   g. The Easement Tenant or agent acting on behalf of the Easement Tenant shall inspect the manure hoses or pipes and culvert on a daily basis while land application of wastewater or manure is occurring. This inspection is to ensure that he manure hoses or pipes are not leaking and runoff from the land application site and irrigation system is not

occurring. If a discharge or leaks are found where process wastewater or manure is reaching any surface waters of the state or flowing onto property not owned by the Easement Tenant or not included in the nutrient management plan, the Easement Tenant is responsible for taking immediate steps to stop the discharge or leaks and to immediately report such discharge to the County. The Easement Tenant shall maintain documentation of these inspections consistent with the requirements of the Department of Environment and Natural Resources, which documentation shall be available for inspection by County upon County's request.

h. The Easement Tenant shall at its sole cost restore the road right-of-way and road surface to its condition prior to the installation to the satisfaction of the Brookings County Highway Superintendent; and

i. In the event the road right-of-way or road surface at any time thereafter collapses or deteriorates as a result of such culvert installation, Easement Tenant shall at its sole cost restore such road right-of-way or road surface.

j. In the event County determines it to be necessary to grade or otherwise improve such County Road which grading or improvement requires the temporary or permanent removal and/or relocation of such manure hose or pipe and culvert, Tenant shall promptly upon notice from County remove and/or relocate such manure hose or pipe and culvert as per the request of County at tenant's sole expense.

2. This easement shall be personal to Easement Tenant. In the event Easement Tenant sells the Concentrated Animal Feeding Operation which benefits from this easement, then this easement and all rights thereunder shall cease and Easement Tenant at its sole expense shall remove the manure hose or pipe and restore the road right-of-way to the satisfaction of the County Highway Superintendent, unless a new easement is entered with the purchaser of such operation,

3. In the event at any time Easement Tenant fails to perform any of the obligations under #1 above, including the obligation to properly maintain the manure hose or pipe, then and in such event County may terminate this easement and Easement Tenant shall remove such manure hose or pipe and restore the road right-of-way. In the event Easement Tenant, upon demand of County, fails to remove such manure hose or pipe and restore the road right-of-way, County may do so and shall be entitled to recover from Easement Tenant all costs for such removal and restoration.

4. In the event of a leak or spill of manure from the manure hose or pipe, Easement Tenant shall promptly clean up such leak or spill and shall be solely responsible for and shall pay all costs involved in such cleanups.

5. In the event a civil lawsuit arising from the acts or omissions of the Easement Tenant, its officers, employees, agents, and representatives in the placing or maintain of such manure hose or pipe; and culvert under this Agreement or arising in any manner regarding the operation of the Concentrated Animal Feeding Operation of Easement Tenant, the Easement Tenant shall defend, indemnify, and hold harmless the County, its officers, employees, agents, and representatives from and against any and all liability, claims, damages, actions, judgment, losses, costs, and expenses, including costs of litigation and attorney's fees, whether at low, in equity before an administrative agency or otherwise.

6. Easement Tenant shall provide and al all times maintain General Liability insurance in the amount of at least $100,000.00, with an Environmental Protection Insurance rider in the amount of at least $100,000.00; to clean up ;any spills or environmental damages which might occur as a result of the operation of the Concentrated Animal Feeding Operation. Such insurance shall name County as an additional insured with regard to Tenant's use of the Easement
7. This Agreement contains the entire agreement and understanding of the parties with respect to the subject matter of this Agreement and supersedes all prior or contemporaneous oral or written understanding, agreements, promises, or other undertakings by and among the parties. This agreement may not be modified or amended, nor any right thereunder waived, other than by a written document signed by all parties.
8. This agreement shall be governed by, interpreted and construed in accordance with the laws of South Dakota. The venue of any suit or arbitration arising under this Agreement shall be in Brookings, Brookings County, South Dakota.
9. Nothing herein shall be construed to constitute or establish any type of joint venture, partnership, or any other type of legal relationship between the parties relating to such manure pipe and culvert.

7/23/2020

Initial Approval (Brookings County Highway Superintendent — Date

Dated this _____ day of _____. 20_____

BROOKINGS COUNTY, SOUTH DAKOTA EASEMENT TENANT
A Governmental Corporation

By: _____ By: _____

Chairperson
Brookings County Board
Of County Commissioners

Its: _____

ATTEST:

_____
Brookings County Auditor

STATE OF SOUTH DAKOTA)
)
COUNTY OF BROOKINGS) (Corporate Seal)

On this the _____ day of _____, 20 _____, before me, _____, the undersigned officer, personally appeared _____, of the County of Brookings, State of South Dakota, known

to me or satisfactorily proven to be the person described in the foregoing instrument and acknowledge that he executed the same for the purposed therein stated and for the purposes therein contained and that such governmental corporation executed the same.

IN WITNESS WHEREOF I hereunto set my hand and official seal.

_____
Notary Public – South Dakota

My commission expires:

Signature of Applicant: N Coetzee

STATE OF SOUTH DAKOTA)
)
COUNTY OF BROOKINGS)

On this the 29th day of July, 20 20, before me, Caleigh Zitzloff, the undersigned officer, personally appeared Nico Coetzee, of the County of Brookings, State of South Dakota, known to me or satisfactorily proven to be the person described in the foregoing instrument and acknowledge that he executed the same for the purposed therein stated and for the purposes therein contained and that such governmental corporation executed the same.

IN WITNESS WHEREOF I hereunto set my hand and official seal.

Caleigh Zitzloff
Notary Public – South Dakota

My commission expires:
January 31, 2024

CALEIGH ALISYN ZITZLOFF
NOTARY PUBLIC - MINNESOTA
My Commission Expires Jan. 31, 2024

HIGHWAY DEPARTMENT USE ONLY:
COMMENTS:

Final Approval Upon Completion (Brookings County Highway Superintendent)

PARNELL TWP

LAND OWNER

Exhibit A

T 109 N

R 48 W

JOINS ALTON TWP

JOINS TRENTON TWP

JOINS ELKTON TWP

JOINS MOODY COUNTY, SD

478 AVE | 479 AVE | 480 AVE | 481 AVE | 482 AVE | 483 AVE | 484 AVE

214 ST | 215 ST | 216 ST | 217 ST | 218 ST | 219 ST | 220 ST

Shirley Deethardt LE 156 | 6 168 | Ruth Sutter 148 | Mildred Vaske 164

Lawrence & Patricia Jensen 78.18 | Marcel & Sandra Basdte Family Trust 160 | Curtis & Tammy Friedrich 232.38 | 5 154 | B

James & Margaret Suhr 4 320 | David Beaty 3.10 | Curtis & Tammy Friedrich 193.62 | John Coughlin 80

Margaret Oppelt Trust 160 | David & Sandra Diedrich 3 266.61 | Kevin & Jill Suhr 160 | Kodiak Pork LLC 33.39

164.92 | Louis Postma 151.06 | 2 Newdale Hutt Breth Inc. 320.08

Vaske Farms, LLC 1 320 | A | Norbert & Margaret Lorenzen 302.61

Lester & Nancy VanDyke 152.93 | Curtis Friedrich 159 | 7 John & Vicki Miles 270.64 | C | D

Lorie Michaels 160 | Douglas & Annette Stein 8 151 | LO Olson Family Trust 116.57 | Rodney Greve 160

Lawrence & Patricia Jensen 148 | 9 154 | 80 Jason Coughlin | 80 Jeremy Coughlin | Steven Greve 160

John & Patrick Coughlin 159 | Charles Short 160 | 10 Emmett & Julia Coughlin 308.39

Vaske Farms, LLC 160 | Brian & Tena Kruger 11 160 | Ronald Vaske 100.60 | Thielen Farms 130.80 | E | Ralph Kruger LE 48

Ralph Kruger LE 12 280 | Ralph & Eileen Kruger 40 | Michael & Lori Ponto etal 320

L | K | Larry Diedrich 63.65 | Danny & Gretchen Sykes 109.80 | Mildred Vaske 260.07 | 18 | Ronald Posek etal 72.19 | Larry Diedrich 105.54

Nancy Zink 307 | James & Delores McKeown 17 160 | Robert Smith 164.18

Colleen Lieberman 80 | Dennis & Sheila Basdte LE 160 | 16 389.39

JB Farms LLC 15 320 | John Nell LE 80 | Thielen Farms Inc. 267.01 | Cross-Wind Jerseys Inc. 61.74

Ronald Vaske 160 | Vaske Farms, LLC 14 156.80 | I 151.98 | Brad & Kimberly Smallfield 156.44

Howard Homer 164 | Vaske Farms, LLC 13 120 | F | G | Karon Burlage Trust 80 | James Smallfield 76.47 | 124.25 | H

324

M | N | Patrick Moriarty Trustee 19 | D | David & Sandra Diedrich 147 | 393.46

Margaret Stein 156.07 | 20 | Midwest Farm Properties 160 | Elkton Farm 306.91 | P | Q

Daniel Vanophlis 78.36 | Larry Diedrich 39.35 | 21 490.09

22 295 | Verle & Audrey Thompson 78.08 | Rebecca Merrill-Lawson 80 | Timothy Sr. Merrill S 160

Karon Burlage Trust 159 | Heesch Farms Inc. 23 159 | J & B Farms LLC 156.79 | Ralph & Eileen Kruger 160

T | Joan Hegerfeld Trust 153.98 | 24 158.64 | Genevieve Fleming etal 160 | Robert Rochel 160

Nancy & Charles Zink 148 | 30 | Charles Zink 451.07 | Z

Clair Collins etal 200 | 29 120 | C.Robert Collin Family Trust | Y | David Diedrich 150.10 | Marlene Cramer Trust 160

Midwest Farm Properties 28 318 | Verle & Audrey Thompson 160 | Verle Thompson 138.47 | X

Thielen Farms Inc. 27 | W 455.66 | Irene Sneller 160

Renata Grafhvondeller 160 | 26 | 80 Joseph Moriarty Family, LP | 80 Kevin Coughlin | Lenny Burlage Trust 145.01 | V | Karon Burlage Trust 138.73 | U

Mary Fleming 160 | Marvin Hammer Trust 25 320 | Sturgis & Gail VanVugt Trust 160

Virgil Stembaugh etal 311 | Larry Diedrich AA 31 147.27 | Roy & Patty Clark Trust 160

Donna Diedrich LE 160 | WHS, LLC 32 160 | 60 | Leslie & Debra Burlage Trust 240

Elizabeth Erickson 160 | 33 | 13 | Brenden Sheppard 160 | Cochrane Properties, LLC 305.68 | WHS, LLC 159.73 | Bradley Lynn 160

164.63 | Scott Sneller 34 160 | 60 Marvin Munsterman | Robert Lynn etal 35 240 | Bradley Lynn etal 320 | 120

160 | Heesch Farms Inc. 36 160 | LO Olson LLP 80 | Dwayne Myers 120

LAND OWNER & RURAL RESIDENT MAPS

Small Tracts

Section 1 A South Dakota State - 20.02
Section 5 B Brett & April Flemming - 5
Section 7 C Spencer & Jennifer Diedrich - 29.35
D Ryan & Danielle Schlevelbein - 10.65
Section 11 E Taylor Krueger - 20.70
Section 13 F Hegerfeld Farms Inc. - 25
G Crosswinds Jerseys, LLC - 16.59
H Wesley & Wanda VanDyke - 18.60
Section 14 I Crosswind Jerseys - 7
Section 17 J Alan & Janet Clark - 13
Section 18 K Daniel & Jonda Weise - 5.01
L Michael Short - 11.93
Section 19 M Ryan & Danielle Jaacks - 8.15
N Mark Johnson - 5
O Troy & Shannon Rasmussen - 11.79
Section 20 P Thomas & Marie Schmit - 6.42
Q Daniel & Dana Stein - 7.49
Section 21 R Thilen Farms Inc. - 7.50
Section 22 S Charles Harning - 10
Section 24 T Roger & Reva Brown - 5.56
Section 26 U Robert Lynn - 23.27
V Arlo Jurrens - 14.99
Section 27 W John Cox - 10
Section 28 X Brent & Carrie Thompson - 20.62
Section 29 Y Diedrich Bros. Inc. - 6.90
Section 30 Z Barry & Tammy Anderegg - 6.93
Section 31 AA Diedrich Bros. Inc. - 12.73

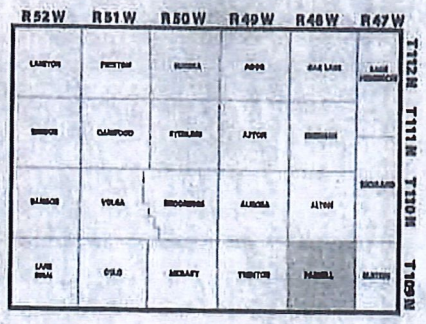

All material in this book is protected by U.S. copyright law. Any reproduction, in whole or part, will be prosecuted.

EASEMENT FOR USE OF

COUNTY ROAD RIGHT-OF-WAY

THIS EASEMENT AGREEMENT is made and entered into between BROOKINGS COUNTY, SOUTH DAKOTA, a South Dakota public corporation (hereinafter "County") and GOLDEN DAKOTA FARMS LLC (hereinafter "Easement Tenant".)
Company Name

Name: NICO COETZEE Address: 48 188 221 STREET City: ELKTON

Landline: 605.997.5059 Mobil: 620.451 1892 Email: KSDAIRY@PLD.com

RECITALS:

WHEREAS, Easement Tenant, operates a Concentrated Animal Feeding Operation, located in Section 3, Township SPRING CREEK Range 108 48, ~~Brookings County~~ Moody County, South Dakota; and

WHEREAS, as part of its manure disposal system, Easement Tenant uses hoses or pipe to transport manure to other locations for purposes of treatment or disposal; and

WHEREAS, Easement Tenant desires to place one of its manure hoses or pipes across the right-of-way and under the road surface of Brookings County Road 486 AVE / 33 at the location as shown in Exhibit "A", attached hereto and by this reference incorporated herein; and

WHEREAS, County is willing to grant to Easement Tenant an Easement for the use of such right-of-way for such purposes on the terms and conditions as hereafter set forth.

THEREFORE, in consideration of the mutual agreements herein set forth, the Parties agree as follows:

1. County does hereby grant to Easement Tenant the non-exclusive right to use the Brookings County Road 33/486 right-of-way for the purposes of placing a manure disposal hose or pipe at the location identified in Exhibit "A" under the following conditions:
   a. The exact location and manner of placing the culvert for such manure hose or pipe shall be as approved by the Brookings County Highway Superintendent;
   b. The culvert shall be a minimum size of N.A ;
   c. The culvert shall be ***bored under the road surface***;
   d. The Easement Tenant shall pay all costs for the installation of such culvert and manure hose or pipe;
   e. The culvert and manure hose or pipe shall be placed so as to prevent the manure from entering areas of drainage and the culvert shall be sloped so that the manure will flow to one end in the event of a leak;
   f. The Easement Tenant shall at all times at its sole cost properly maintain the manure hose of pipe and culvert so as to prevent leaks;
   g. The Easement Tenant or agent acting on behalf of the Easement Tenant shall inspect the manure hoses or pipes and culvert on a daily basis while land application of wastewater or manure is occurring. This inspection is to ensure that he manure hoses or pipes are not leaking and runoff from the land application site and irrigation system is not

occurring. If a discharge or leaks are found where process wastewater or manure is reaching any surface waters of the state or flowing onto property not owned by the Easement Tenant or not included in the nutrient management plan, the Easement Tenant is responsible for taking immediate steps to stop the discharge or leaks and to immediately report such discharge to the County. The Easement Tenant shall maintain documentation of these inspections consistent with the requirements of the Department of Environment and Natural Resources, which documentation shall be available for inspection by County upon County's request.

h. The Easement Tenant shall at its sole cost restore the road right-of-way and road surface to its condition prior to the installation to the satisfaction of the Brookings County Highway Superintendent; and

i. In the event the road right-of-way or road surface at any time thereafter collapses or deteriorates as a result of such culvert installation, Easement Tenant shall at its sole cost restore such road right-of-way or road surface.

j. In the event County determines it to be necessary to grade or otherwise improve such County Road which grading or improvement requires the temporary or permanent removal and/or relocation of such manure hose or pipe and culvert, Tenant shall promptly upon notice from County remove and/or relocate such manure hose or pipe and culvert as per the request of County at tenant's sole expense.

2. This easement shall be personal to Easement Tenant. In the event Easement Tenant sells the Concentrated Animal Feeding Operation which benefits from this easement, then this easement and all rights thereunder shall cease and Easement Tenant at its sole expense shall remove the manure hose or pipe and restore the road right-of-way to the satisfaction of the County Highway Superintendent, unless a new easement is entered with the purchaser of such operation,

3. In the event at any time Easement Tenant fails to perform any of the obligations under #1 above, including the obligation to properly maintain the manure hose or pipe, then and in such event County may terminate this easement and Easement Tenant shall remove such manure hose or pipe and restore the road right-of-way. In the event Easement Tenant, upon demand of County, fails to remove such manure hose or pipe and restore the road right-of-way, County may do so and shall be entitled to recover from Easement Tenant all costs for such removal and restoration.

4. In the event of a leak or spill of manure from the manure hose or pipe, Easement Tenant shall promptly clean up such leak or spill and shall be solely responsible for and shall pay all costs involved in such cleanups.

5. In the event a civil lawsuit arising from the acts or omissions of the Easement Tenant, its officers, employees, agents, and representatives in the placing or maintain of such manure hose or pipe; and culvert under this Agreement or arising in any manner regarding the operation of the Concentrated Animal Feeding Operation of Easement Tenant, the Easement Tenant shall defend, indemnify, and hold harmless the County, its officers, employees, agents, and representatives from and against any and all liability, claims, damages, actions, judgment, losses, costs, and expenses, including costs of litigation and attorney's fees, whether at low, in equity before an administrative agency or otherwise.

6. Easement Tenant shall provide and al all times maintain General Liability insurance in the amount of at least $100,000.00, with an Environmental Protection Insurance rider in the amount of at least $100,000.00; to clean up ;any spills or environmental damages which might occur as a result of the operation of the Concentrated Animal Feeding Operation. Such insurance shall name County as an additional insured with regard to Tenant's use of the Easement
7. This Agreement contains the entire agreement and understanding of the parties with respect to the subject matter of this Agreement and supersedes all prior or contemporaneous oral or written understanding, agreements, promises, or other undertakings by and among the parties. This agreement may not be modified or amended, nor any right thereunder waived, other than by a written document signed by all parties.
8. This agreement shall be governed by, interpreted and construed in accordance with the laws of South Dakota. The venue of any suit or arbitration arising under this Agreement shall be in Brookings, Brookings County, South Dakota.
9. Nothing herein shall be construed to constitute or establish any type of joint venture, partnership, or any other type of legal relationship between the parties relating to such manure pipe and culvert.

7/23/2020

Initial Approval (Brookings County Highway Superintendent — Date

Dated this _____ day of _____. 20_____

BROOKINGS COUNTY, SOUTH DAKOTA EASEMENT TENANT
A Governmental Corporation

By: _____ By: _____

Chairperson
Brookings County Board
Of County Commissioners

Its: _____

ATTEST:

_____

Brookings County Auditor

STATE OF SOUTH DAKOTA)
)
COUNTY OF BROOKINGS) (Corporate Seal)

On this the _____ day of _____, 20 _____, before me, _____, the undersigned officer, personally appeared _____, of the County of Brookings, State of South Dakota, known

to me or satisfactorily proven to be the person described in the foregoing instrument and acknowledge that he executed the same for the purposed therein stated and for the purposes therein contained and that such governmental corporation executed the same.

IN WITNESS WHEREOF I hereunto set my hand and official seal.

_____
Notary Public – South Dakota

My commission expires:

Signature of Applicant: N Coetzee

STATE OF SOUTH DAKOTA)
)
COUNTY OF BROOKINGS)

On this the 29th day of July, 20 20, before me, Caleigh Zitzloff, the undersigned officer, personally appeared Nico Coetzee, of the County of Brookings, State of South Dakota, known to me or satisfactorily proven to be the person described in the foregoing instrument and acknowledge that he executed the same for the purposed therein stated and for the purposes therein contained and that such governmental corporation executed the same.

IN WITNESS WHEREOF I hereunto set my hand and official seal.

Caleigh Zitzloff
Notary Public – South Dakota

My commission expires:
January 31, 2024

CALEIGH ALISYN ZITZLOFF
NOTARY PUBLIC - MINNESOTA
My Commission Expires Jan. 31, 2024

HIGHWAY DEPARTMENT USE ONLY:
COMMENTS:

Final Approval Upon Completion (Brookings County Highway Superintendent)

Exhibit A.

Ahlers Farms Crop Map 2020 **Map 12**

Brookings County / Elkton Township 109-47

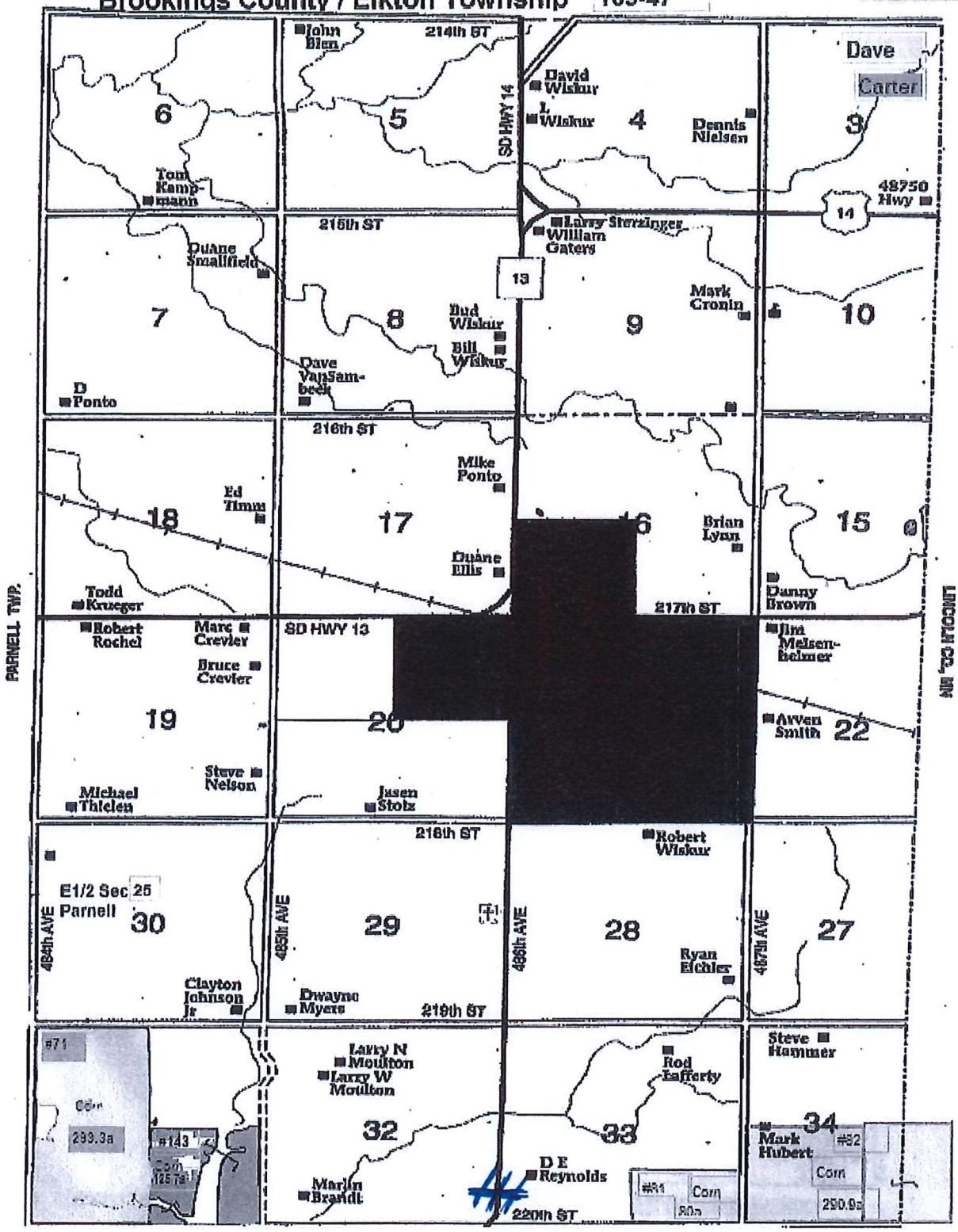

APPLICATION FOR OCCUPANCY
RIGHT-OF-WAY OF COUNTY HIGHWAYS
Email: highway@brookingscountysd.gov
Fax: 605-696-8278

To: The Board of County Commissioners Brookings County, South Dakota.

Application is made by Sioux Valley Energy for occupancy of Right-of-Way

ADDRESS OF PROPOSED CONSTRUCTION

City/Township Name: Oslo, Section: 9 Quarter Section: NE NW (SE) SW

Street/Avenue of Construction: 216th St, Nearest Intersection: 463rd Ave

Distance from nearest intersection: 1,570' North South East (West)

A sketch showing the location must be attached.
The following information is pertinent to the proposed installation:

1. Intended usage 7.2KV Electrical Distribution
2. Cable Type 1/0 Aluminum
3. Outside Diameter or Pipe Size 2.5 Inches
4. Method of Installation Directional bore
5. Crossing Bituminous Roads Yes

*This installation will comply with the National Safety Code and all Federal Guidelines.
*Warning signs will be installed where appropriate.
*Ditches will be restored back to present condition.
*Owner will move its buried cable or pipe, in case of road construction, at no cost to the County.
*Prior to any road construction or maintenance within the County, the owner shall call South Dakota One-Call at 1-800-781-7474 for location of the facilities.

Signature of Applicant: Terry Pleasty (Sioux Valley Energy) Date: 07/27/2020

Applicant Address: P.O. Box 216 Colman SD 57017

Phone: 605-256-1621 Fax: _____

I Approve of this Application:
Signature of Adjacent Landowner: _____ Date: _____
(Owns property immediately adjacent to the public right-of-way that is affected by the Applicant's proposed installation)

Adjacent Landowner Address: _____

Phone: _____ Fax: _____

Recommended for Approval:
By: _____ Date: 7/29/2020
(Brookings County Superintendent)

Approved: Board of County Commissioners
By: _____ Date: _____
(Commission Chairman)

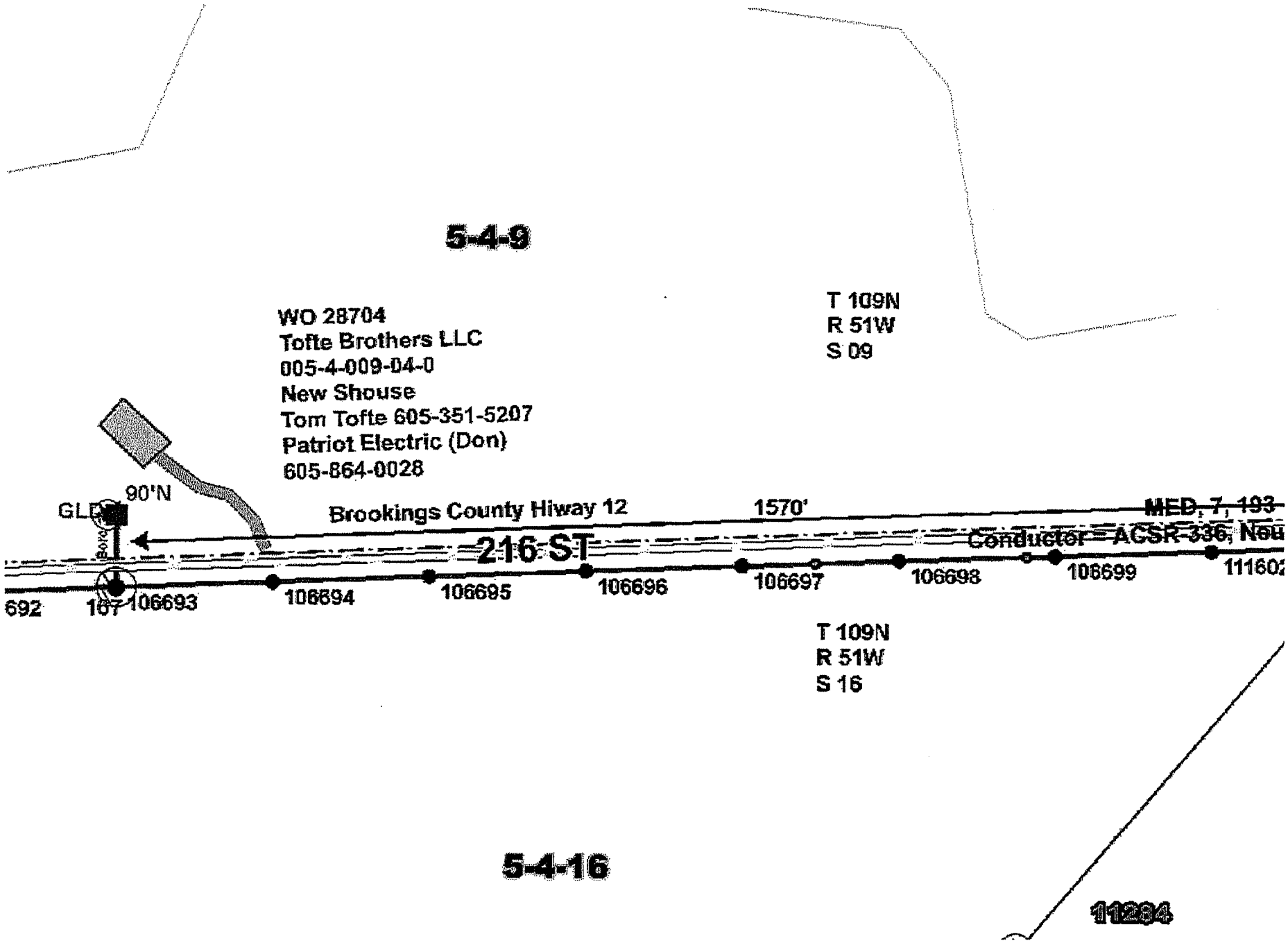
5-4-9
WO 28704
Tofte Brothers LLC
005-4-009-04-0
New Shouse
Tom Tofte 605-351-5207
Patriot Electric (Don)
605-864-0028
T 109N
R 51W
S 09
90'N
GLD
Brookings County Hiway 12
1570'
MED, 7, 193
Conductor - ACSR-336, Neu
216 ST
692
167
106693
106694
106695
106696
106697
106698
106699
111602
T 109N
R 51W
S 16
5-4-16
11284

REQUEST TO FILL VACANCY

Position Vacancy Equipment Operator

Department Highway Department

Vacancy Result of: Resignation of Mitch Lang

Please respond to each of the following or provide the requested item. Attach additional sheets if necessary.

1. Job Description, attached.

2. Departmental Organizational Chart, attached for review and approval.

3. Severance Payout Calculations for Terminating Employee (if applicable)

Vacation	$
Sick Leave	$
Employee Retirement Recognition	$
Other	$
Total	$

4. Explain the effects of leaving the vacancy until severance is accumulated.
NA

5. Explain the effects of not filling the position or discussion of alternatives.
With this resignation this leaves the department 2 FTE's short during the busiest time of construction season.

6. Provide description of departmental discussions about the vacancy.
We have been shorthanded all summer long and equipment is sitting idle some days because we do not have enough manpower to operate efficiently, places a heavier burden on the crew as whole trying to do double duty. We have been working with Weed and Pest to get some help here and there but they have obligations to tend to also.

7. Estimated length of time to fill the position after approval.
2 to 3 weeks — internal posting

8. Any additional comments?

Department Manager

7/28/2020
Date

Request for filling of vacancy: _____Approved _____Denied

Chairman, Brookings County Commission

Date

POSITION TITLE: Equipment Operator
DEPARTMENT: Highway
REPORTS TO: Highway Superintendent
FLSA STATUS: Non-Exempt
WAGE GRADE: 5

DESCRIPTION OF WORK

General Statement of Duties

The fundamental reason this classification exists is to operate safely and efficiently specialized medium to heavy equipment (work with heavy equipment less than 80% of the time). The work requires considerable skill in manipulating medium to heavy equipment and constant attention to safety of operation in order to prevent accidents. Assignments are outlined in detail by supervisors. Standard procedures are followed and work is inspected periodically for safety and economy in operation. The Road Foreman will work as a lead to the Equipment Operator. General supervision is received from the Highway Superintendent and/or Lead foreman and work is reviewed through the proper functioning and performance of equipment.

Examples of Duties: (Any one position may not include all of the duties listed, nor do the listed examples include all duties which may be found in positions of this grade.)

- Operate and maintain medium to heavy duty capacity dump trucks, tractors, trailers, rollers, loaders, packers, power booms, recyclers, and trucks with specialized equipment to include sand spreader, hot oil distributor used in hauling materials and equipment to perform highway repair work.
- Operate truck mounted snowplows and other snow removal equipment
- Operate equipment of small to medium capacity such as loader, backhoe in performing highway repair and patchwork
- Operate other self-propelled equipment of similar size and complexity
- Operate heavy equipment on a limited basis in the performance of County functions
- Perform service and minor repairs to equipment to include maintenance, tire repair, etc
- Reline brakes, repair engines, pumps or compressors, and adjust bearings, clutches or carburetors.
- Maintain equipment in proper operating condition by performing simple preventive maintenance tasks. Inspect equipment prior to use to ensure that is in proper operating condition. Cleans equipment using appropriate materials.
- Assist in snow and ice removal, culvert and bridge construction and repair, and loading and hauling dirt, rocks, gravel, snow, and other materials.
- Assist the Mechanic/Fabricator, Heavy Equipment Operators, and Road Foreman when not operating equipment.
- Operate power driven machinery such as jackhammer to other similarly sized equipment.
- Install and/or replace road signs. Cut and remove brush from ditches. Clean, paint, and perform other general custodial duties on County property.
- Communicate any unsafe conditions or accidents/injuries in a timely manner to the supervisor in order to facilitate prompt correct or reporting.
- Attend special training and familiarization workshops dealing with innovations in medium to heavy equipment operations, repairs and maintenance.
- Prepare and keep records related to work order requests, labor expenditures, job status, estimates, and proposed or completed projects.
- Perform work in a manner consistent with safe practices.
- Wear personal protective equipment when required.
- Develop and maintain positive, professional relationships with the general public and other employees.
- Perform other such duties and functions as assigned and necessary to the proper performance of the position.

QUALIFICATION FOR APPOINTMENT

Required Knowledge, Skills, and Abilities

- Working knowledge and experience in operation of medium to heavy equipment and/or related equipment used in construction and maintenance activities or any such combination of education, experience and training as may be acceptable to the hiring authority.
- General knowledge of procedures, techniques and standards applicable to highway and roadway maintenance and construction.
- Ability to perform manual labor, withstand variable weather conditions and work extended hours if necessary.
- Ability to understand and follow both written and verbal instructions and communicate effectively verbally and in writing.
- Possession of a valid South Dakota Class A Commercial Driver's License (CDL).

Physical Demands

The physical demands described here are representative of those that must be met by an employee to successfully perform the essential functions of this job. Reasonable accommodations may be made to enable individuals with disabilities to perform the essential functions.

- While performing the duties of this job, the employee is frequently required to communicate with vendors, employees, co-workers, supervisory staff, etc.
- The employee is regularly required to sit and use hands to finger, handle, or feel.
- The employee is frequently required to stand; walk; reach with hands and arms; climb or balance; stoop, kneel, and crouch, or crawl.
- The employee must regularly lift and/or move up to 50 pounds and occasionally lift and/or move up to 100+ pounds with assistance.
- Ability to work during emergencies. Ability to work as needed and to be available for on-call shifts.

Work Environment

The work environment characteristics described here are representative of those an employee encounters while performing the essential functions of this job. Reasonable accommodations may be made to enable individuals with disabilities to perform the essential functions.

- While performing the duties of this job, the employee is regularly exposed to fumes or airborne particles; toxic or caustic chemicals; employee is exposed to outside weather conditions.
- The noise level in the work environment is usually moderate but may be occasionally loud.

Examination, Testing, and Certification

The Examination, Testing and Certification described here are representative of those that must be met by an employee to successfully perform the essential functions of this job. Reasonable accommodations may be made to enable individuals with disabilities to perform the essential functions.

- Valid South Dakota Commercial Drivers License (Class A).
- Successful competition in written and/or oral interviews.
- Other such examination as deemed appropriate and necessary by the Superintendent and/or County.

Education

- High School diploma or GED certificate preferred

OR

Any equivalent combination of education and experience as is acceptable to the hiring authority.

_____ _____

Commission Chairperson *Date*

Brookings County Finance Office
520 3rd Street, Suite 100
Brookings, SD 57006
Phone: 605-696-8250
www.brookingscountysd.gov

July 23, 2020

Commissioners-

Attached to my letter is a list of items to be surplused. I've broken down the items to be destroyed, the items to be sold, and the items to be transferred to another department.

If you have any questions, please let me know.

Thank you,

Jenna Byrd

Jenna Byrd
Senior Finance Assistant
Brookings County

Items To Be Destroyed

IT DEPARTMENT

- HP M451DN CNDF381375
- HP Printer VNB3C35370
- HP Printer CNB9J19677
- Dell Desktop DK40P22
- Dell Desktop DK51P22
- Dell Desktop DK8TN22
- Dell Desktop BNS0CP1
- Dell Desktop 2N3LXV1
- Dell Desktop 3492XV1
- Dell Desktop 3PMLHK1
- LENOVO MG00EMPY
- HP Printer JPBF971629
- 11 MONITORS (IN BASEMENT)
- Dell Desktop B9353F1
- DELL LAPTOP D9BMHP1 (Asset #11-018)
- DELL LAPTOP 76CFGV1 (Asset #12-032)
- DELL LAPTOP 6WJK3L1 (Asset #80058)
- DELL LAPTOP 3DKZCF1
- GW LAPTOP 0036481787
- Dell Desktop J1DHW52
- Dell Desktop 5V7MQ02 (Asset #14-043)
- Dell Desktop OLD TECH PC FROM BROADCAST ROOM
- Dell Desktop 48HPTV1 (Asset #12-041)
- Dell Desktop 4HHT6V1 (Asset #12-030)
- Dell Desktop 48KPTV1
- Dell Desktop 1VNQ432
- Dell Desktop 48JQTV1
- Dell Desktop B454332
- DELL SERVER 3L4X4V1
- DELL SERVER GG5DBG1
- DELL SERVER C916R91
- Dell Desktop 4FZWVH1
- Dell Desktop 5CG5LS1
- Dell Desktop F5RFCX1
- Dell Desktop F5QJCX1
- Dell Desktop 4DG7691
- Dell Desktop 7P8HQ02
- Dell Desktop HR5LDG1
- Dell Desktop DLR4DC1

- Dell Desktop F5RGCX1
- Dell Desktop 92JQL02
- Dell Desktop F5RHCX1
- Dell Desktop F5QHCX1
- Dell Desktop 6XGHNV1
- Dell Desktop 71Q79Z1
- Dell Desktop 48HQTV1
- Dell Desktop JGTRH02
- Dell Desktop 16D7LS1
- OLD ROD TOSHIBA PRINTER
- OLD HP PRINTER
- PARTIALLY DISASSEMBLED HP PRINTER (M452)
- ~~OLD PUBLIC DISPLAY TV~~
- ~~OLD LOBBY DISPLAY TV~~
- 1 BOX WIRES/CABLES
- 2 BOXES KEYBOARDS
- 1 BOX MISCELLANEOUS GARBAGE
- 1 BOX OLD CRESTRON EQUIPMENT (TOUCH PANELS, RECEIVERS)
- VARIOUS INK/TONER CARTRIDGES
- 2 MORE MONITORS (ON 2ND FLOOR)

BROOKINGS COUNTY EXTENSION

- IBM Personal Wheelwriter Typewriter 6781
- Monitor- HPL1950G #CNC931QHQ0

BCOAC

- Pub Table (broken)
- 5- Fronts of Lockers

REGISTER OF DEEDS

- HP LaserJet 4100 Printer- USBNG41433

STATES ATTORNEY

- Printer - SN CNDF381375 LaserJet 400

Items To Be Sold Online

COMMUNITY HEALTH

- 3 Wooden Chairs

SHERIFF'S DEPARTMENT

- 2011 Chevy Tahoe- 1GNSK2E05BR256423 (Asset #11-015)
- 2012 Chevy Impala- 2G1WD5E3XC1241337 (Asset #12-009)
- 2006 Dodge Durango- 1D4HB38N66F158771 (Asset #79190)

Items To Be Transferred

Brookings County Extension to Community Health

- Hoover Techtronic Floorcare Vacuum (Model #UH72011)

Stacy Steffensen, Commission Department Director
Brookings County
520 3rd St., Suite 210
Brookings, SD 57006
605-696-8205
ssteffensen@brookingscountysd.gov

STAFF REPORT:

Scheduled Agenda Items

- *9:00 AM –20th Street Overpass:* City Engineer Jackie Lanning will be at the meeting to have the board discuss and take action on what type of pavement you prefer for the portion of 20th Street South from I-29 east to 34th Avenue. Lanning provided information, which is included in the packet.

Regular Business Items

- *Easement Agreements:* There are two easement agreements from Golden Dakota Farms, LLC to run manure hose/pipe under county roads. Brian Gustad is recommending approval.
- *Right of Way Agreement:* There is one routine right of way agreement. Brian Gustad is recommending approval.
- *Vacancy Request:* Brian Gustad is requesting to post an Equipment Operator position internally. This position is vacant due to the resignation of Mitch Lang.
- *Surplus:* Jenna Byrd provided a list of items to declare as surplus. She broke down the list into items to destroy, sell or transfer.

Director's Report

- The majority of Commissioners has indicated an interest in scheduling a tour of county roads/bridge/sites again. I would like to discuss potential dates to do the tour. Brian Gustad says late September or early October would be best.
- The SDACC Fall Convention is September 13-15, 2020 at the Ramkota in Sioux Falls. I do need to submit our registration information for payment at the second meeting in August, so I'll be asking who plans to attend and if you do plan to attend, who needs hotel rooms. I've attached the tentative agenda to my staff report.
- Attached to my report is information from SDACC President Cindy Heiberger regarding an upcoming mental illness virtual meeting. If you want me to register you for that meeting, please let me know.
- Also attached to my report is information on a mental illness Q & A event hosted by Brookings Empowerment Project on August 10th at 5:30 PM at Pioneer Park in Brookings.
- There is also information with my report regarding the public comment period now open for the US 14 – US 14 Bypass Corridor Study.

Public Notices

- ✓ Brookings County 4-H Achievement Days – August 3-6, 2020
- ✓ Brookings Empowerment Project Picnic, Monday, August 10, 2020, 5:30 – 7:30 PM, Pioneer Park, Brookings
- ✓ CDI golf outing, Thursday, August 13, 2020 at Brookings Country Club
- ✓ Offices closed, Monday, September 7, 2020 due to the Labor Day holiday
- ✓ SDACC Fall Convention, Sept. 13-15, 2020, Ramkota, Sioux Falls

Stacy Steffensen
Commission Department Director
Brookings County, South Dakota

2020 County Convention Registration

September 14 - 15, 2020

SIOUX FALLS RAMKOTA HOTEL

Pre-Registration Fee is $185.00 per person if you are paid by **August 28.**
This fee includes all program materials, breaks, and meals.
Registration after August 28 will be $225.00.

QUESTIONS: Call 1-605-224-4554

Cancellation Policy: Full refund if canceled by August 28, 2020
NO REFUND after August 28.

Return this form with payment **by August 28** to:
SD Counties
211 E Prospect Ave
Pierre SD 57501

County / Company: _____

Name **Title**

1. _____
2. _____
3. _____
4. _____
5. _____
6. _____
7. _____
8. _____

Spouse/Guest Registration

1. _____
2. _____
3. _____
4. _____

Spouse/Guest Registration

❒ **Meals $50.00** (Includes Opening Luncheon, Tuesday Breakfast, Tuesday Lunch)

*****Area Motels*** BLOCK NAME – "SD Counties"** **BLOCKS RELEASE AUGUST 14, 2020**

Rooms are available at the following hotels:
Dakotah Lodge – 332-2000 - $79.00
AmericInn – 274-1180 - $98.00
Baymont – 338-6242 - $79.00
Holiday Inn & Suites – 331-2040 - $119.00
ClubHouse Inn & Suites – 361-8700 - $109.99 (Shuttle service available)

Casual/theme attire is a MUST!

Monday, September 14, 2020		
8:00 - 5:00 pm	Registration Desk Open	Grand Rushmore Hall
8:00 - 9:00 am	SDACC Executive Board Meeting/Resolutions	Crystal Room *(2nd Floor)*
8:30 - 9:30 am	SDACO Executive Board Meeting	Conference Room III
8:30 - 9:45 am	SDACHS Executive Board Meeting	Maple Room
	SDACWO Executive Board Meeting	Conference Room II
	Commission Assistants / HR Roundtable	Maple Street Café
9:00 - 9:45 am	SDACO Resolution Committee	Roosevelt Room
	SDACC Nominating Committee	Maple Street Café
	SDACO Continuing Education Committee	Lincoln Room
10:00 - 10:45 am	Public Comment Protocol - *CE*	Washington Room
	Tax Deed Review - *CE*	Roosevelt Room
	TBD	
	SDACHS Open Business Meeting	Jefferson Room
	TBD	
11:00 - 11:45 am	Drainage	Amphitheatre II
	Auditors Legislative Audit - *CE*	Amphitheatre I
	TBD	
	TBD	
	SD Dept of Transportation	Jefferson Room
	TBD	
12:00 - 1:00 pm	Welcome Session - Luncheon	Exhibit Hall
1:15 - 4:00 pm	2nd Annual Big Equipment Demo Day	Exhibit Hall & Annex
1:15 - 2:00 pm	GID & County Ag Land Adjustments / Soil Tables	Amphitheatre II
	Secretary of State - *CE*	Amphitheatre I
	SD Dept of Motor Vehicles - *CE*	Roosevelt Room
	Vital Records - *CE*	Lincoln Room
	SDACWO Bylaws	Conference Room II
2:15 - 3:00 pm	Legislative Audit - commissioners	Amphitheatre II
	Levies - *CE*	Amphitheatre I
	SD Dept of Motor Vehicles (Con't) - *CE*	Roosevelt Room
	Register of Deeds Roundtable - *E*	Lincoln Room
	Mental Health	Conference Room II
3:00 - 3:30 pm	Vendor Fair - Break	Exhibit Hall & Annex
3:45 - 4:30 pm	County Zoning & Appeals - *CE*	Amphitheatre II
	SD Dept of Motor Vehicles (Con't) - *CE*	Roosevelt Room
	Document Updates in Dept of Revenue - *CE*	Lincoln Room
	Minnehaha County Jail Tour	*Provide own transportation*
4:45 - 5:30 pm	SDACO 1st General Membership Meeting	Washington Room
	SDACWO Business Meeting	Conference Room II
	SDACC Caucus Meetings & 1st Reading of Resolutions	

	Randall Reservoir - Amphitheatre I *Upper Missouri Valley - Amphitheatre I* *Oahe - Amphitheatre I* *South East - Amphitheatre II* *SouthEast Central - Lincoln Room* *Lake Region - Jefferson Room* *Sioux Valley - Maple Room* *Black Hills - Roosevelt Room*	
5:30 PM	Vendor Reception *Serving snacks & beverages*	Exhibit Hall & Annex
Tuesday, September 15, 2020		
7:00 - 8:15 am	Attendee and Vendor Breakfast	Exhibit Hall & Annex
8:00 - 4:00 pm	Registration Desk Open	Grand Rushmore Hall
8:30 - 9:15 am	Juvenile Detention Center - *E*	Amphitheatre II
	SD Retirement Program Update - *CE*	Washington Room
	Highway Supts Legislative Audit	Jefferson Room
	Union Gospal Mission	Conference Room II
9:15 - 9:45 am	Vendor Fair - Break	Exhibit Hall & Annex
10:00 - 10:45 am	Learning from the Past, Prepare for the Future	Amphitheatre II
	SDACO 2nd General Membership Meeting	Washington Room
	SDACHS Roundtable Discussion	Lincoln Room
	Triage Center, Link	Conference Room II
11:00 - 11:45 am	SDACC General Membership Meeting	Amphitheatre II
	SDML WC and SDPAA - *CE*	Amphitheatre I
	SD Drivers Licensing - *CE*	Roosevelt Room
	TBD	
	SDACHS Business Meeting	Jefferson Room
	SDACWO Business Meeting	Conference Room II
12:00 - 1:00 pm	Safety Awards Luncheon *Serving full meal*	
1:00 - 1:30 pm	Vendor Fair - Break	
1:30 - 2:15 pm	Auditor Roundtable Discussion - *E*	Amphitheatre I
	Treasurer Roundtable Discussion - *E*	Roosevelt Room
	Register of Deeds Discussion - *E*	Lincoln Room
	Government Pandemic Preparedness Panel	Harvest Room (?) *(Lower Level)*
2:30 - 4:00 pm	Closing Speaker - *Governor Noem invited*	Washington Room
	SDACWO Case Discussion	Conference Room II

Stacy Steffensen

From: Brookings County Commission
Subject: FW: Please send this out the the commissioners and elected officials as a follow up to this conference. It will really be great!

From: Heiberger, Cindy <cheiberger@minnehahacounty.org>
Sent: Monday, July 27, 2020 1:50 PM
To: Kristie Jacobsen <kris@sdcountycommissioners.org>
Subject: Please send this out the the commissioners and elected officials as a follow up to this conference. It will really be great!

Hello Commissioners and Elected Officials,

I wanted to follow-up with you on my previous email that included details for the *Mission: Possible | Reducing the Impact of Substance Abuse and Mental Illness in Our Communities* event hosted virtually on August 19-20, 2020. Planning for the event has been going well and I am excited to now share with you the formal invitation and to let you know that the registration site is up! You can visit SDAHECevents.com for more details and to reserve your spot to attend the virtual event. IT's FREE

GIFT BOXES FOR FIRST 150 REGISTERED ATTENDEES

As an incentive for early reserving your space now, the first 150 attendees to register online will each have a special gift box shipped to them. How exciting!

FEATURED CELEBRITY SPEAKERS

At this event, we will welcome nationally-recognized speakers, local professionals and community leaders to share engaging content and offer networking opportunities for all attendees. We are also working to make sessions available for CME + CEU credit. All of this from the comfort of your own desktop or mobile device! Listed below are more details about a few of those speakers:

Featured during the conference will be the following celebrity speakers:

Tony Hoffman | Pro BMX Competitor and Recovering Addict

Sean Astin | Actor, Director, Producer and Mental Health Advocate

OTHER SPEAKERS INCLUDE

Vaney Hariri & Tamien Dysart – Co-Founders of Think 3D Solutions

Charity Doyle – Executive Director of OneHeart: A Place for Hope and Healing

Erik Muckey – Executive Director/CEO of Lost&Found

J. Carlos Rivera – CEO/Co-Founder of Generation Red Road

Attached you will find more details about the virtual event hosted on August 19 - 20, 2020. Here is also the link again to register as well: SDAHECEvents.com. We ask you to share this with your team, co-workers and others that you know would enjoy attending!

We look forward to seeing you "virtually" in the next few weeks and please let me know if you have any questions!

Cindy Heiberger
Board of Commissioners
MINNEHAHA COUNTY
415 N. Dakota Ave., Sioux Falls, SD 57104
605-951-7684
cheiberger@minnehahacounty.org

The information contained in this message is confidential, protected from disclosure and may be legally privileged. If the reader of this message is not the intended recipient or an employee or agent responsible for delivering this message to the intended recipient, you are hereby notified that any disclosure, distribution, copying, or any action taken or action omitted in reliance on it, is strictly prohibited and may be unlawful. If you have received this communication in error, please notify us immediately by replying to this message and destroy the material in its entirety, whether in electronic or hard copy format. Thank you.

Come to BEP Picnic and Get Your Questions Answered About

MENTAL ILLNESS

Monday, August 10, 2020 - 5:30-7:30 pm

Pioneer Park - By the Band Shell

Be one of the first 40 attendees to receive a box lunch (our treat)–sandwich, chips, cookie and water.
Be a good neighbor and wear a mask - Not mandatory but highly recommended! Remember to bring your lawn chairs.

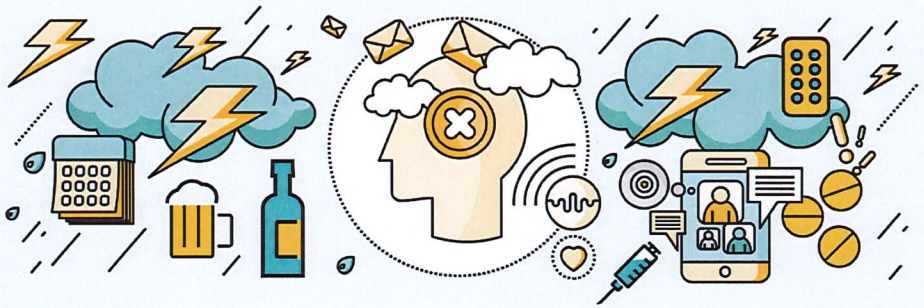

GUEST SPEAKER

Phyllis Arends, Former Director of NAMI South Dakota

Mental illness is common.

You are not alone. Come to our picnic: Get answers to your questions, learn more about Mental Illness, and the Brookings Empowerment Project

Education, Empathy, and Experience

The box lunch will be served prior to the discussions.

Should there be inclement weather the picnic will meet at
Saint Thomas More - Social Hall | 1700 8th St South, Brookings
Enter at the east or north doors

For questions
Please email bep.57006@gmail.com

NAMI National Alliance on Mental Illness

United Way

BROOKINGS EMPOWERMENT PROJECT

14 US14-US14 Bypass
CORRIDOR STUDY

QUESTIONS & COMMENTS
Written and verbal comments will be accepted any time **between July 22nd and August 21st, 2020.**

PROJECT CONTACTS:

Jon Wiegand, P.E., PTOE
Consultant Project Manager (HDR)
jonathan.wiegand@hdrinc.com
605-782-8105

Steve Gramm, P.E.
SDDOT Project Manager
steve.gramm@state.sd.us
605-773-6641

LEARN MORE:
www.us14-14bcorridor.com

ONLINE PUBLIC INFORMATION RELEASE VIA VIRTUAL PUBLIC MEETING #3

Due to limitations on public gatherings recommended by the Centers for Disease Control, the SDDOT is posting information to the study website rather than presenting documents at an in-person public meeting. Members of the public may submit questions or comments through the study website or by reaching out to one of the project representatives via email or phone.

This final public meeting is geared towards presenting corridor scenarios representative of potential future projects that address needs identified as part of this study. These scenarios group refined concepts presented at the previous public meeting. Your input will aid in the development of study recommendations and general timeline for implementation.

STUDY AREA MAP

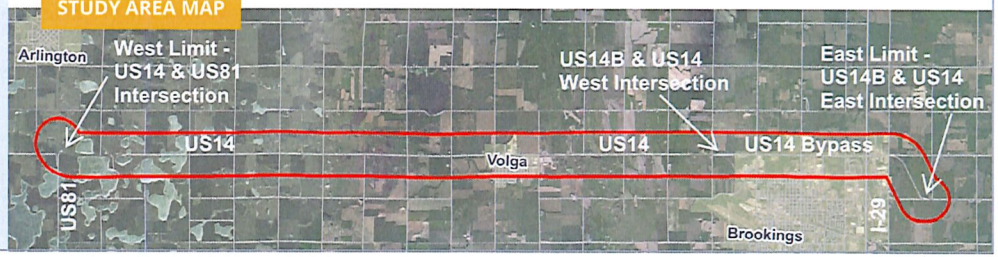

Election Notice

SDML WORKERS' COMPENSATION FUND

NOTICE OF BOARD OF TRUSTEES ELECTION

ZOOM MEETING

The SDML Workers' Compensation Fund Board of Trustees election will be held Wednesday, October 7, 2020 at 11:00am CST via Zoom meeting. Instructions for participating remotely in the meeting are listed below and will be emailed to each Member in advance of the meeting. Each Member entity participating remotely will have one vote.

Two city seats are up for election. The positions are currently held by:

- Karl Alberts, Finance Officer, Aberdeen
- Laurie Gronlund, Human Resources Director, Pierre

If you are interested in a position on the SDML Workers' Compensation Fund or would like to nominate someone who is a Member of the SDML Workers' Comp Fund and is either an elected or appointed official, please send a letter of application by the deadline date of August 31, 2020 to:

Sandi Larson
SDML Director of Risk Sharing Services
208 Island Drive
Ft. Pierre, South Dakota 57532
Phone: 1-800-658-3633
E-mail: sandi@sdmunicipalleague.org

Positions on the Board of Trustees are for three years and the successful candidates will be seated on January 1, 2021. All nominations for the election will be forwarded to the Nominating Committee.

Join Zoom Meeting on October 7:
https://us02web.zoom.us/j/83914537720?pwd=WTVrYzVTQ3QzajFaSWhmdkh4V3dpZz09
Meeting ID: 839 1453 7720

SDML Workers' Compensation Fund
Selected Financial Data

	As of December 31,				
Assets	2019	2018	2017	2016	2015
Cash and cash equivalents	$ 2,927,988	$ 4,418,344	$ 3,185,786	$ 3,150,780	$ 4,522,614
Investments	32,518,939	29,431,409	29,471,002	28,133,408	26,608,996
Receivables	553,445	659,456	561,643	502,957	511,719
Prepaid expenses	1,000	-	3,795	588,341	-
Contributed surplus and member equity in NLC Mutual	2,106,846	2,029,717	1,960,132	1,893,847	1,834,234
Total assets	$ 38,108,218	$ 36,538,926	$ 35,182,358	$ 34,269,333	$ 33,477,563
Liabilities and Net Position					
Liabilities					
Estimated liability for reported and unreported claims and claims adjustment expenses	$ 9,173,790	$ 9,655,594	$ 8,516,916	$ 8,918,230	$ 8,574,055
Other liabilities, primarily advance member contributions	3,125,733	3,131,159	3,187,059	2,978,989	3,384,798
Total liabilities	12,299,523	12,786,753	11,703,975	11,897,219	11,958,853
Net position	25,808,695	23,752,173	23,478,383	22,372,114	21,518,710
Total liabilities and net position	$ 38,108,218	$ 36,538,926	$ 35,182,358	$ 34,269,333	$ 33,477,563

	As of December 31,				
Income	2019	2018	2017	2016	2015
Operating revenues:					
Member contributions earned, net of renewal and loss control credits and reinsurance *	$ 7,200,709	$ 7,094,033	$ 6,723,867	$ 6,473,606	$ 6,154,602
Operating expenses:					
Claims and claims adjustment expenses incurred, net	4,393,127	5,715,189	4,471,036	4,473,007	4,544,786
General and administrative expenses	1,122,608	1,088,769	1,062,642	1,026,790	1,034,326
Dividends to members, return on equity credits	624,467	598,330	546,040	493,382	439,398
Total operating expenses	6,140,202	7,402,288	6,079,718	5,993,179	6,018,510
Operating income (loss)	1,060,507	(308,255)	644,149	480,427	136,092
Nonoperating revenues:					
Net investment income	918,886	512,460	395,835	313,364	320,713
Earned member equity, NLC Mutual	77,129	69,585	66,285	59,613	57,735
Total nonoperating revenues	996,015	582,045	462,120	372,977	378,448
Change in net position	$ 2,056,522	$ 273,790	$ 1,106,269	$ 853,404	$ 514,540
* Renewal and loss control credits	$ 2,166,598	$ 2,118,792	$ 2,025,552	$ 2,041,657	$ 1,694,408

Mission Statement

The SDML Workers' Compensation Fund has a strong commitment to providing a competitive workers' compensation program for the public entities in South Dakota through administrative, loss control and technical services.
As a risk-sharing pool the SDML Workers' Compensation Fund was created *for* its Members and is controlled *by* its Members.

Board of Trustees

Karl Alberts
Chairman
Finance Officer, Aberdeen

Bob Wilcox
Vice Chairman
SDACC Executive Director, Pierre

Yvonne Taylor
Secretary
SDML Executive Director, Ft. Pierre

Laurie Gronlund
Human Resources Director, Pierre

Jodi Mathis
Human Resource Officer, Spearfish

Brittany Smith
City Administrator, Philip

Brenda Bode
Davison County Commissioner, Mt. Vernon

Jim Schmidt
Lincoln County Commissioner,
Sioux Falls

Mike Grosek
Mayor, Webster

CREATED, SPONSORED, AND ENDORSED BY
South Dakota Municipal League
Yvonne Taylor, Executive Director
800-658-3633

ENDORSED BY
South Dakota Association of
County Commissioners
Bob Wilcox, Executive Director
605-224-4554

Service Providers

Administration & Marketing
Insurance Benefits, Inc.
4901 Isabel Place, Suite 210
Sioux Falls, SD 57108
800-233-9073

Actuarial Services
AON Risk Solutions
17875 Von Karman Avenue, Suite 300
Irvine, CA 92614
949-608-6332

Claims Administration
Claims Associates, Inc.
4901 Isabel Place, Suite 100
Sioux Falls, SD 57108
888-654-6495

Claims Audit
Northshore International Insurance
Services
76 Lafayette Street
Salem, MA 01970

Financial Audit
RSM US LLP
110 S. Phillips Avenue, Suite 300
Sioux Falls, SD 57104
605-336-0753

Investment Manager
Bankwest Trust
PO Box 998
Pierre, SD 57501
605-224-7392

Loss Control
Safety Benefits, Inc.
PO Box 522
Plankinton, SD 57368
888-313-0839

Re-Insurance
Safety National Casualty Corporation
2043 Woodland Parkway
St. Louis, MO 63146

2019 Annual Financial Report

SDML Workers' Compensation Fund

To the Membership

SDML
Workers · Compensation · Fund

Election Notice

The South Dakota Public Assurance Alliance (SDPAA) Board of Directors election will be held Wednesday, October 7, 2020 at 11:00 a.m. CST remotely via zoom. Instructions for participating in this meeting are listed below and also will be emailed to all members two weeks prior to the meeting. The election shall be determined by a majority of those SDPAA Member entities participating and voting with each Member entity having one vote. Election winners will be seated on the Board of Directors starting January 1, 2021 to serve a three year term. A copy of the Board of Directors Election Policy Resolution is available upon request.

If you are interested in a position on the SDPAA Board of Directors, you must meet the following qualifications:

Article V – Paragraph 2 - Qualifications of Members of the Board.

Members of the Board shall be either:

a. Elected officials of an Alliance Member, provided the governing Board of the Member in question has supported their appointment or candidacy by Resolution; or

b. Representatives, employees or appointed officials of an Alliance Member, provided the governing Board of the Member in question has supported their appointment or candidacy by Resolution.

SDPAA Board of Directors positions up for election are currently held by:

- Tracy Turbak, Director of Finance, retired, Sioux Falls
- Kathy Glines, Harding County Auditor, Buffalo
- Becky Brunsing, City Administrator/Finance Officer, Wagner

Please send a letter of application and supporting Resolution by the deadline date of August 31, 2020 to:

Lisa Nold, SDML Office Manager
208 Island Drive
Ft. Pierre, South Dakota 57532
Phone: 1-800-658-3633
Email: Lisa@sdmunicipalleague.org

All applications will be forwarded to the SDPAA Nominating Committee.

Join Zoom Meeting on October 7:
https://us02web.zoom.us/j/83914537720?pwd=WTVrYzVTQ3QzajFaSWhmdkh4V3dpZz09
Meeting ID: 839 1453 7720
Password: 008902

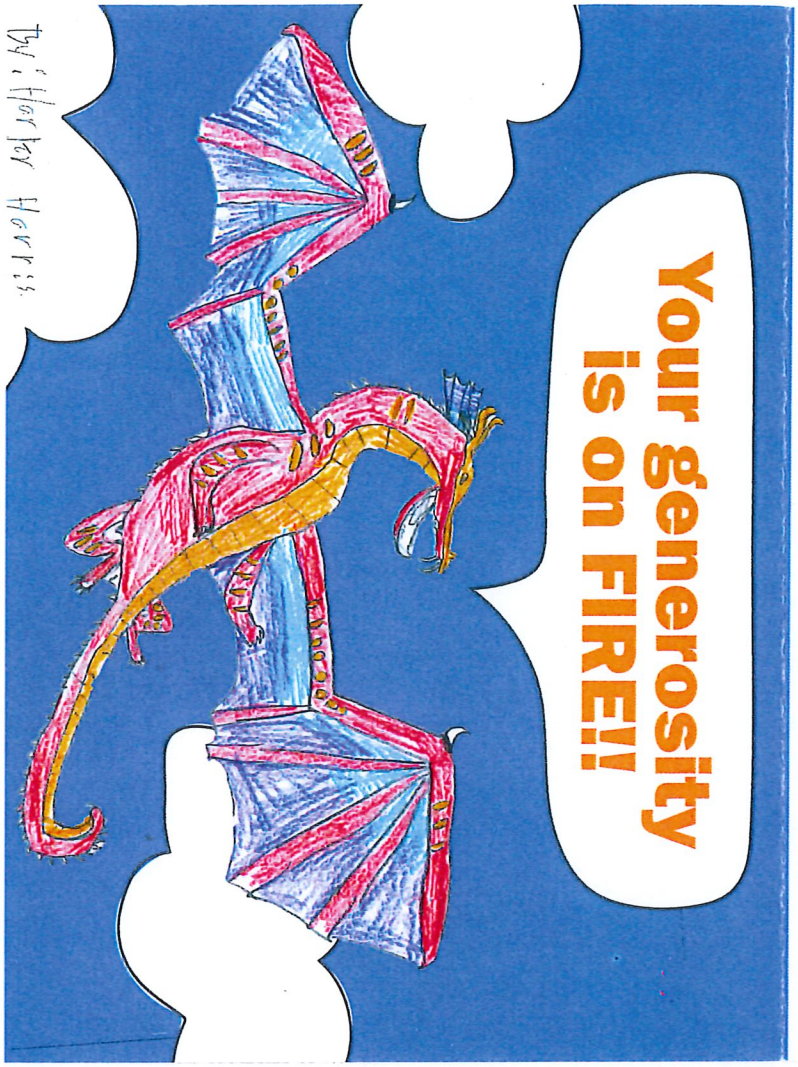

Original Artwork by a Club Member
Great futures really do start with you.

BOYS & GIRLS CLUB
OF THE NORTHERN PLAINS

Brookings County -

Though we are keeping our distance, we wanted you to know that we are keeping you close in our hearts. Thank you for your generosity!

-Your friends at the Boys + Girls Club

DENR
SOUTH DAKOTA

DEPARTMENT of ENVIRONMENT
and NATURAL RESOURCES
JOE FOSS BUILDING
523 EAST CAPITOL
PIERRE, SOUTH DAKOTA 57501-3182
denr.sd.gov

July 27, 2020

Jim Stahl
Norfeld Hutterian Brethren, Inc. (HBI) Swine Operation
20426 482nd Avenue
White, SD 57276

Re: Revised Phosphorus-Based Nutrient Management Plan (NMP)

Dear Mr. Stahl:

The Department of Environment and Natural Resources (DENR) received your request to remove the fields listed in Table 1 from your approved phosphorus-based NMP and add the fields listed in Table 2 your approved phosphorus-based NMP. Your existing phosphorus-based NMP is part of your application for coverage under the *2003 General Water Pollution Control Permit for Concentrated Animal Feeding Operations* (general permit). Your animal feeding operation was originally approved on November 14, 1996, and permitted on August 7, 1997, **(general permit # SDG-0100098)**. The permit was transferred to Norfeld HBI on July 28, 2004.

Table 1 - Fields Being Removed from NMP

Field #	County	Legal Description	Available Acres	Soil Sampling Requirements	
				0-2 feet	Additional
5 (old)	Brookings	SE ¼, Section 23, T111N, R48W	19.1	Yes	No
14	Brookings	SW ¼, Section 26, T111N, R48W	12.3	Yes	Yes
15	Brookings	SE ¼, Section 26, T111N, R48W	29.6	Yes	Yes
19	Brookings	NW ¼, Section 34, T111N, R48W	52.0	Yes	Yes
22	Brookings	NW ¼, Section 24, T111N, R48W	97.6	Yes	No

We are approving the field removal and are removing *Fields 5 (old), 14, 15, 19, and 22* from your approved phosphorus-based NMP.

Table 2 - Fields Being Added to NMP

Field #	County	Legal Description	Available Acres	Soil Sampling Requirements	
				0-2 feet	Additional
5	Brookings	SE ¼, Sec. 20, T111N, R48W	137.4	Yes	No
6	Brookings	SW ¼, Sec. 21, T111N, R48W	141.3	Yes	No

We are also approving the proposed field addition and are including *Fields 5 and 6* in your approved phosphorus-based NMP. With the removal of *Fields 5 (old), 14, 15, 19, and 22*, and the addition of *Fields 5 and 6*, you still have adequate land available in your NMP to meet the permit requirements. **Please put one copy of the approved field information in Appendix D of your copy of the permit.** You are required to comply with the terms and conditions of your permit.

We have received your permit application for state permit coverage under the 2017 *General Water Pollution Control Permit for Concentrated Animal Feeding Operations* (2017 general permit) and your application is currently under review. Until permit coverage is issued under the 2017 general permit, you may continue to use your currently approved NMP for the land application of manure and wastewater from your operation in compliance with your coverage under the 2003 general permit. **If you would like the new fields to be included in the permit application for the 2017 general permit, an amended NMP which includes the necessary field information and updated spreadsheets will need to be submitted to the department for review and approval.**

You are also responsible for contacting the local planning and zoning office in the county where manure application will take place to determine if there are any local ordinances or requirements with which you need to comply.

All of the new fields will require soil tests from zero to two feet prior to manure application.

To add fields to your approved phosphorus-based NMP, you must submit the required information for each additional field to the department for our review and approval. Information on adding fields to your approved phosphorus-based NMP may be obtained from your local Natural Resources Conservation Service (NRCS) office. You may also contact us for assistance at (605) 773-3351, or visit our website at **http://denr.sd.gov/des/fp/fieldadditions.aspx** for instructions on adding fields. **You may not apply manure to any fields not included in your approved phosphorus-based NMP.**

If manure application will involve placing hoses or other equipment in a state highway right of way (for example, in a road ditch or through a culvert), you must first obtain a Permit to Occupy Right of Way. Application for this permit may be made through the local South Dakota Department of Transportation area office. Contact your local SD DOT area office for more information on this permit. In addition, please contact your county highway superintendent to determine if your county has similar requirements.

One copy of the field information is being retained for our files. The attached field list is an updated listing of the fields that are currently approved for manure or wastewater application. The attached map shows the location of each field. Please review this information and notify the department if any of the information is incorrect. If the enclosed field list and map are correct, please place them in your NMP.

If you have any questions regarding the content of this letter, please feel free to contact Aviana Knochel, Feedlot Permit Program at (605) 773-3351. Thank you for your cooperation.

Sincerely,

Paul N. Wegleitner
Natural Resources Project Engineer
Feedlot Permit Program

cc: Brookings County Commissioners
Kevin Banken, CENTROL, Brookings, SD

Enclosures: Field List
Field Map

Norfeld Colony Swine Operation Approved Field List

July 27, 2020

All fields require a zero to two foot soil test prior to manure application. The fields identified as being located over a shallow aquifer are shaded in the following tables and have additional soil testing requirements. For these fields, soil tests are required from 0 to 2 feet **and** 2 to 4 feet prior to manure application. Please refer to section 1.4.4.4., beginning on page 29 of the general permit for the annual nutrient management requirements.

For fields that require additional soil testing from 2 to 4 feet, you have the option to either conduct the initial 0 to 2-foot and the 2 to 4-foot soil test prior to land application of manure or the alternative option to conduct the initial 0 to 2-foot soil test prior to manure application and a second 0 to 2-foot soil test within four weeks after harvesting the crop. Please refer to section 1.4.4.4., beginning on page 29 of the general permit, for the annual nutrient management requirements. **You must notify the department in writing if you plan to use the post-harvest soil sampling option.**

Based on the initial field information submitted for the fields listed in Table 1, manure application may be based on nitrogen need as determined from the table on page 29 of the general permit. **However, before manure or wastewater can be applied to these fields, you must have a current soil test and use the table on page 29 to determine whether the field fits into a nitrogen need, phosphorus crop removal, or no application category based on the current phosphorus level of the field.**

Table 1 – Norfeld Colony Swine Operation Nitrogen-Based Nutrient Management Plan Fields

Line #	Field or Tract #	County	Legal Description	Acres		Soil Sampling	
				Total	Available	0-2'	Additional
1	1	Brookings	SW ¼, Section 14, T111N, R48W	135.0	130.0	Yes	No
2	2	Brookings	SE ¼, Section 14, T111N, R48W	145.0	143.0	Yes	No
3	3	Brookings	NE ¼, Section 15, T111N, R48W	153.6	150.6	Yes	No
4	4	Brookings	SE ¼, Section 15, T111N, R48W	134.7	123.7	Yes	No
5	5	Brookings	SE ¼, Section 20, T111N, R48W	137.4	137.4	Yes	No
6	6	Brookings	SW ¼, Section 21, T111N, R48W	151.3	141.3	Yes	No
9	9	Brookings	NW ¼ and W ½ NE ¼, Section 12, T111N, R48W	211.0	196.9	Yes	No
16	16	Brookings	SE ¼, Section 27, T111N, R48W	121.1	108.0	Yes	Yes
17	17	Brookings	SE ¼, Section 10, T111N, R48W	148.5	128.2	Yes	No
21	21	Brookings	SW ¼, Section 13, T111N, R48W	75.0	64.7	Yes	No
23	23	Brookings	NW ¼, Section 28, T111N, R48W	135.0	125.0	Yes	No
24	24	Brookings	SW ¼, Section 10, T111N, R48W	159.0	145.4	Yes	No
25	25	Brookings	W ½ of SW ¼, Section 11, T111N, R48W	76.6	70.2	Yes	No
26	26	Brookings	SW ¼, Section 12, T111N, R48W	130.0	123.0	Yes	No
			Total Acres:	1,913.2	**1,787.4**		

Norfeld Colony Swine Operation Approved Field List

July 27, 2020

Please note in your phosphorus-based NMP the estimated time it will take to build the listed fields up to 50 parts per million (ppm) (Olsen test) or 75 ppm (Bray-1 test) of phosphorus. You may need additional land in order to apply manure to your fields based on phosphorus crop removal at that time.

Approved Land Application Sites for Norfeld Colony Swine Operation

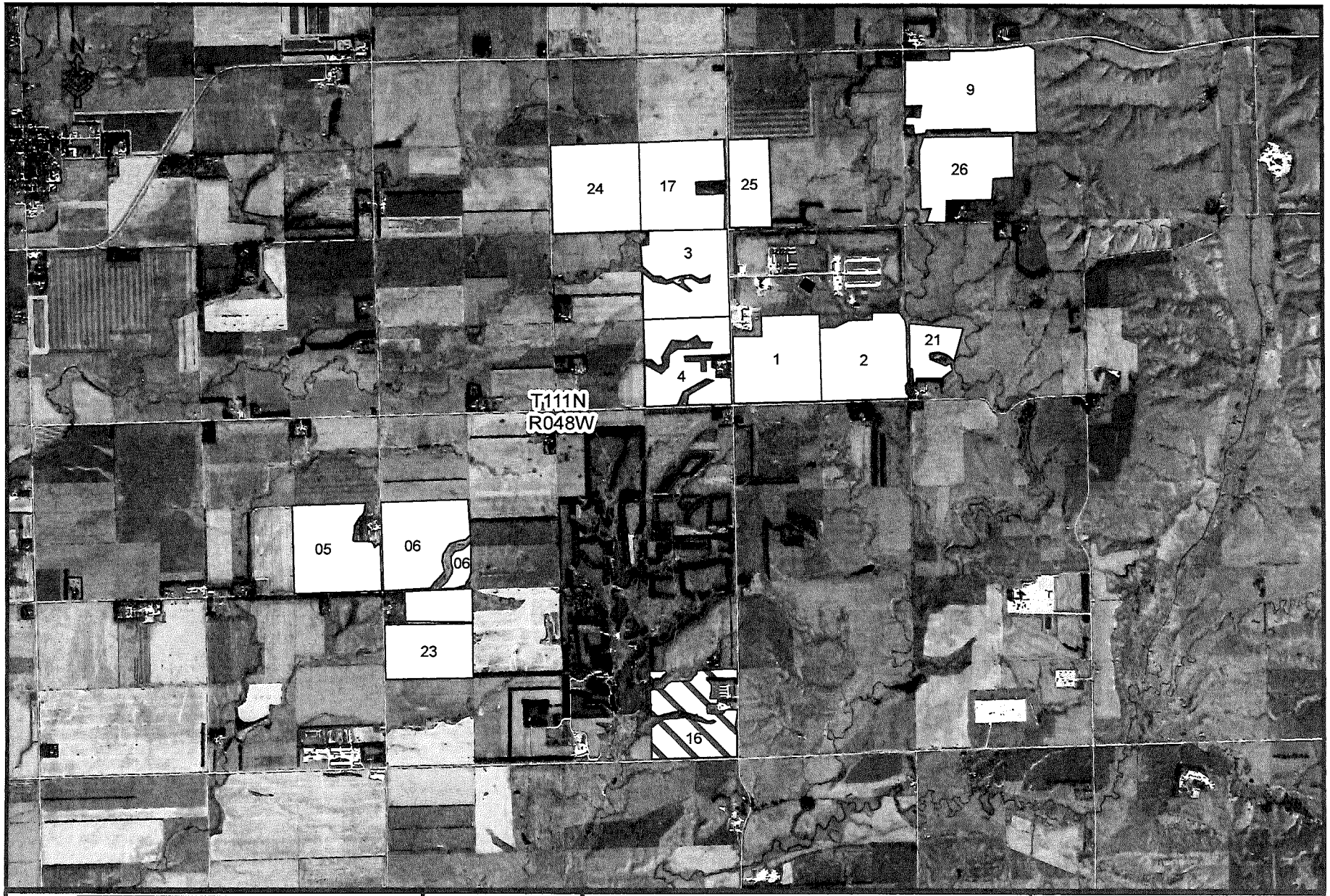

Legend

- Additional Sampling
- 0' - 2' Sampling

Scale

0 1 2 Miles

South Dakota Department of Environment and Natural Resources

Protecting South Dakota's Tomorrow ... Today

FACILITY: Norfeld Colony Swine Operation	PERMIT NUMBER: SDG-0100098
LEGAL DESCRIPTION: Southeast 1/4 of Section 27, Township 111 North, Range 48 West	
COUNTY: Brookings	DATE: July 2020

Note: Field Locations are approximate within the 1/4 section and should be verified with field maps submitted by the producer.

DENR
SOUTH DAKOTA

DEPARTMENT of ENVIRONMENT
and NATURAL RESOURCES
JOE FOSS BUILDING
523 EAST CAPITOL
PIERRE, SOUTH DAKOTA 57501-3182
denr.sd.gov

July 27, 2020

Jim Stahl
Norfeld Hutterian Brethren, Inc. (HBI) Swine Operation
20426 482nd Avenue
White, SD 57276

Re: Revised Phosphorus-Based Nutrient Management Plan (NMP)

Dear Mr. Stahl:

The Department of Environment and Natural Resources (DENR) received your request to remove the fields listed in Table 1 from your approved phosphorus-based NMP and add the fields listed in Table 2 your approved phosphorus-based NMP. Your existing phosphorus-based NMP is part of your application for coverage under the *2003 General Water Pollution Control Permit for Concentrated Animal Feeding Operations* (general permit). Your animal feeding operation was originally approved on November 14, 1996, and permitted on August 7, 1997, **(general permit # SDG-0100098)**. The permit was transferred to Norfeld HBI on July 28, 2004.

Table 1 - Fields Being Removed from NMP

Field #	County	Legal Description	Available Acres	Soil Sampling Requirements	
				0-2 feet	Additional
5 (old)	Brookings	SE ¼, Section 23, T111N, R48W	19.1	Yes	No
14	Brookings	SW ¼, Section 26, T111N, R48W	12.3	Yes	Yes
15	Brookings	SE ¼, Section 26, T111N, R48W	29.6	Yes	Yes
19	Brookings	NW ¼, Section 34, T111N, R48W	52.0	Yes	Yes
22	Brookings	NW ¼, Section 24, T111N, R48W	97.6	Yes	No

We are approving the field removal and are removing *Fields 5 (old), 14, 15, 19, and 22* from your approved phosphorus-based NMP.

Table 2 - Fields Being Added to NMP

Field #	County	Legal Description	Available Acres	Soil Sampling Requirements	
				0-2 feet	Additional
5	Brookings	SE ¼, Sec. 20, T111N, R48W	137.4	Yes	No
6	Brookings	SW ¼, Sec. 21, T111N, R48W	141.3	Yes	No

We are also approving the proposed field addition and are including *Fields 5 and 6* in your approved phosphorus-based NMP. With the removal of *Fields 5 (old), 14, 15, 19, and 22*, and the addition of *Fields 5 and 6*, you still have adequate land available in your NMP to meet the permit requirements. **Please put one copy of the approved field information in Appendix D of your copy of the permit.** You are required to comply with the terms and conditions of your permit.

We have received your permit application for state permit coverage under the 2017 *General Water Pollution Control Permit for Concentrated Animal Feeding Operations* (2017 general permit) and your application is currently under review. Until permit coverage is issued under the 2017 general permit, you may continue to use your currently approved NMP for the land application of manure and wastewater from your operation in compliance with your coverage under the 2003 general permit. **If you would like the new fields to be included in the permit application for the 2017 general permit, an amended NMP which includes the necessary field information and updated spreadsheets will need to be submitted to the department for review and approval.**

You are also responsible for contacting the local planning and zoning office in the county where manure application will take place to determine if there are any local ordinances or requirements with which you need to comply.

All of the new fields will require soil tests from zero to two feet prior to manure application.

To add fields to your approved phosphorus-based NMP, you must submit the required information for each additional field to the department for our review and approval. Information on adding fields to your approved phosphorus-based NMP may be obtained from your local Natural Resources Conservation Service (NRCS) office. You may also contact us for assistance at (605) 773-3351, or visit our website at **http://denr.sd.gov/des/fp/fieldadditions.aspx** for instructions on adding fields. **You may not apply manure to any fields not included in your approved phosphorus-based NMP.**

If manure application will involve placing hoses or other equipment in a state highway right of way (for example, in a road ditch or through a culvert), you must first obtain a Permit to Occupy Right of Way. Application for this permit may be made through the local South Dakota Department of Transportation area office. Contact your local SD DOT area office for more information on this permit. In addition, please contact your county highway superintendent to determine if your county has similar requirements.

One copy of the field information is being retained for our files. The attached field list is an updated listing of the fields that are currently approved for manure or wastewater application. The attached map shows the location of each field. Please review this information and notify the department if any of the information is incorrect. If the enclosed field list and map are correct, please place them in your NMP.

If you have any questions regarding the content of this letter, please feel free to contact Aviana Knochel, Feedlot Permit Program at (605) 773-3351. Thank you for your cooperation.

Sincerely,

Paul N. Wegleitner
Natural Resources Project Engineer
Feedlot Permit Program

cc: Brookings County Commissioners
Kevin Banken, CENTROL, Brookings, SD

Enclosures: Field List
Field Map

Norfeld Colony Swine Operation Approved Field List

July 27, 2020

All fields require a zero to two foot soil test prior to manure application. The fields identified as being located over a shallow aquifer are shaded in the following tables and have additional soil testing requirements. For these fields, soil tests are required from 0 to 2 feet **and** 2 to 4 feet prior to manure application. Please refer to section 1.4.4.4., beginning on page 29 of the general permit for the annual nutrient management requirements.

For fields that require additional soil testing from 2 to 4 feet, you have the option to either conduct the initial 0 to 2-foot and the 2 to 4-foot soil test prior to land application of manure or the alternative option to conduct the initial 0 to 2-foot soil test prior to manure application and a second 0 to 2-foot soil test within four weeks after harvesting the crop. Please refer to section 1.4.4.4., beginning on page 29 of the general permit, for the annual nutrient management requirements. **You must notify the department in writing if you plan to use the post-harvest soil sampling option.**

Based on the initial field information submitted for the fields listed in Table 1, manure application may be based on nitrogen need as determined from the table on page 29 of the general permit. **However, before manure or wastewater can be applied to these fields, you must have a current soil test and use the table on page 29 to determine whether the field fits into a nitrogen need, phosphorus crop removal, or no application category based on the current phosphorus level of the field.**

Table 1 – Norfeld Colony Swine Operation Nitrogen-Based Nutrient Management Plan Fields

Line #	Field or Tract #	County	Legal Description	Acres		Soil Sampling	
				Total	Available	0-2'	Additional
1	1	Brookings	SW ¼, Section 14, T111N, R48W	135.0	130.0	Yes	No
2	2	Brookings	SE ¼, Section 14, T111N, R48W	145.0	143.0	Yes	No
3	3	Brookings	NE ¼, Section 15, T111N, R48W	153.6	150.6	Yes	No
4	4	Brookings	SE ¼, Section 15, T111N, R48W	134.7	123.7	Yes	No
5	5	Brookings	SE ¼, Section 20, T111N, R48W	137.4	137.4	Yes	No
6	6	Brookings	SW ¼, Section 21, T111N, R48W	151.3	141.3	Yes	No
9	9	Brookings	NW ¼ and W ½ NE ¼, Section 12, T111N, R48W	211.0	196.9	Yes	No
16	16	Brookings	SE ¼, Section 27, T111N, R48W	121.1	108.0	Yes	Yes
17	17	Brookings	SE ¼, Section 10, T111N, R48W	148.5	128.2	Yes	No
21	21	Brookings	SW ¼, Section 13, T111N, R48W	75.0	64.7	Yes	No
23	23	Brookings	NW ¼, Section 28, T111N, R48W	135.0	125.0	Yes	No
24	24	Brookings	SW ¼, Section 10, T111N, R48W	159.0	145.4	Yes	No
25	25	Brookings	W ½ of SW ¼, Section 11, T111N, R48W	76.6	70.2	Yes	No
26	26	Brookings	SW ¼, Section 12, T111N, R48W	130.0	123.0	Yes	No
			Total Acres:	1,913.2	**1,787.4**		

Norfeld Colony Swine Operation Approved Field List

July 27, 2020

Please note in your phosphorus-based NMP the estimated time it will take to build the listed fields up to 50 parts per million (ppm) (Olsen test) or 75 ppm (Bray-1 test) of phosphorus. You may need additional land in order to apply manure to your fields based on phosphorus crop removal at that time.

Approved Land Application Sites for Norfeld Colony Swine Operation

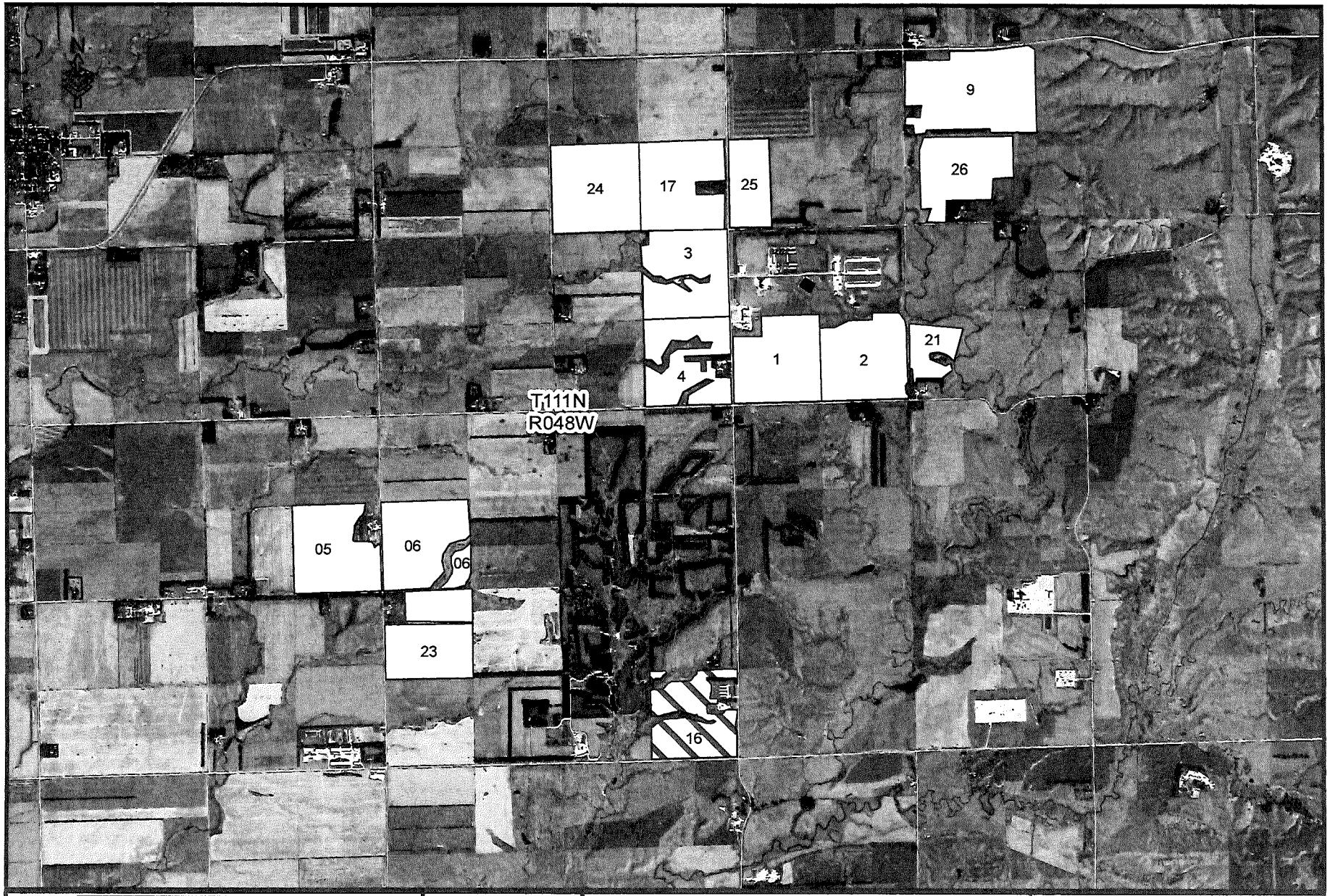

Legend

- Additional Sampling
- 0' - 2' Sampling

Scale

0 1 2 Miles

South Dakota Department of Environment and Natural Resources

Protecting South Dakota's Tomorrow ... Today

FACILITY: Norfeld Colony Swine Operation	PERMIT NUMBER: SDG-0100098
LEGAL DESCRIPTION: Southeast 1/4 of Section 27, Township 111 North, Range 48 West	
COUNTY: Brookings	DATE: July 2020

Note: Field Locations are approximate within the 1/4 section and should be verified with field maps submitted by the producer.

DENR
SOUTH DAKOTA

DEPARTMENT of ENVIRONMENT
and NATURAL RESOURCES
JOE FOSS BUILDING
523 EAST CAPITOL
PIERRE, SOUTH DAKOTA 57501-3182
denr.sd.gov

July 23, 2020

Richard & Debra Ford
Richard & Debra Ford Swine Operation
46272 200th Street
Bruce, SD 57220

RE: Richard & Debra Ford Swine Operation Manure Management System
2017 General Permit Coverage

Dear Mr. and Mrs. Ford:

The Department of Environment and Natural Resources approved your permit application on July 23, 2020 for state permit coverage under the 2017 *General Water Pollution Control Permit for Concentrated Animal Feeding Operations* (general permit).

As you are aware, the department issues a Certificate of Compliance for manure management systems that have had plans and specifications approved and are constructed as designed. Your current Certificate of Compliance was issued on September 22, 2003 for a maximum of 2,000-head of finisher swine and no acres of drainage area. A copy of your current Certificate of Compliance is enclosed. This certificate shall remain in place until such time you change or expand your operation. Should you decide to change or expand your operation, you need to obtain approval of plans and specifications for any alterations or modifications to your manure management system prior to construction. Failure to do so will invalidate this certificate.

You have completed the requirements to obtain state permit coverage under the 2017 general permit **(permit number SDG-100183)**. So, I am granting coverage for your existing manure management system under this permit and a copy of your permit is enclosed. Please refer to this permit number in any future permit correspondence. You are required to operate in compliance with the terms and conditions of this permit.

Your permit and a copy of your current Certificate of Compliance are in the Producer Handbook I am sending you. The Producer Handbook was developed to assist you in meeting the requirements of the General Permit. Using this book will help you manage the documents and paperwork that you will need to complete and retain while operating your animal feeding operation. The book contains forms that you can use to comply with the permit's requirements and is organized to give you a place to put other required information like soil and manure testing lab report forms. You are required to keep all records for a minimum of five years. It is not mandatory

that you use this handbook; however, it will assist you in organizing and maintaining the records that you are required to by the General Permit.

We would like to thank you for your cooperation in ensuring protection of our natural resources. The department encourages you to remain in compliance by properly operating and maintaining your system.

Sincerely,

Kent R. Woodmansey, P.E, Administrator
Feedlot Permit Program
Phone: (605) 773-3351

cc: Brad Woerner, PE, Stockwell Engineers, Inc, Yankton, SD
Luke Muller, F.D.A.L.G., Watertown, SD
Brookings County Commissioners

DENR
SOUTH DAKOTA

DEPARTMENT of ENVIRONMENT
and NATURAL RESOURCES
JOE FOSS BUILDING
523 EAST CAPITOL
PIERRE, SOUTH DAKOTA 57501-3182
denr.sd.gov

July 23, 2020

Richard & Debra Ford
Richard & Debra Ford Swine Operation
46272 200th Street
Bruce, SD 57220

RE: Richard & Debra Ford Swine Operation Manure Management System
State General Permit Application Review

Dear Mr. & Mrs. Ford:

The Department of Environment and Natural Resources received three copies of your application for state permit coverage of your existing permitted finisher swine operation under the 2017 *General Water Pollution Control Permit for Concentrated Animal Feeding Operations* (general permit), **permit application number SDG-100183**. The existing manure management system is currently permitted under the 2003 general permit and is located in the Northeast ¼ of the Southeast ¼ of Section 21, Township 112 North, Range 51 West in Brookings County, South Dakota. There are no changes to the existing manure management system proposed with the 2017 permit application.

On May 7, 2003, the department approved the original plans and specifications for your manure management system for a maximum of 4,000-head of finisher swine to be constructed in two phases. Phase #1 was constructed and permitted. Phase #2 was not constructed.

The permitted Phase 1 portion of your manure management system is for a housed lot feeding a maximum of 2,000-head of finisher swine weighing 55 pounds or more and consists of two deep pit barns with no acres of drainage area. The deep pit barns meet the requirements of the general permit and are designed for at least 270 days of liquid storage capacity.

On May 16, 2016, the department approved plans and specifications for the replacement of the Phase 2 portion of your previously approved manure management system with a single deep pit barn which would house a maximum of 2,400-head of finisher swine weighing 55 pounds or more with no acres of drainage area. The proposed deep pit barn meets the requirements of the general permit and is designed for at least 270 days of liquid storage capacity. With the proposed expansion, your operation will consist of three deep pit barns housing a maximum of 4,400-head of finisher swine once the Phase 2 finisher barn is completed and permitted.

State Permit Application

Your permit application includes a new Certification of Applicant Form, a new Notice of Intent Form, a new Operation and Maintenance guideline, and an updated nutrient management plan (NMP).

We have reviewed and hereby conditionally approve your 2017 permit application. We are also extending the approval of your Phase 2 finisher barn which has not yet been constructed. The Phase 2 finisher barn is the only remaining item from your approved manure management system that has not been constructed. **You will have three years to complete construction of this barn and submit as-built plans with a Notice of Completion. If construction is not completed within the three year timeframe this extended approval will expire.** Requirements you must implement are listed on the attached pages.

Upon completion of construction of the Phase 2 finisher barn, the enclosed Notice of Completion must be returned to the department. **You cannot populate the Phase 2 finisher barn or use the deep pit beneath this barn until an amended Certificate of Compliance and coverage under the 2017 state general permit are issued to include this barn. Once the Notice of Completion has been received and a satisfactory construction inspection has been conducted, the department will issue an amended Certificate of Compliance and coverage under the 2017 state general permit for this barn.**

One copy of the submitted permit application is being retained for our files. If you plan to increase your maximum number of animals or make any modifications to your manure management system, you must obtain department approval prior to increasing your animal numbers or beginning any new construction. If you plan to make any modifications to your nutrient management plan that include a change in manure application method, the addition of land application fields, or a change in crop rotation, you must obtain department approval prior to making the change.

Continued compliance is dependent upon you performing proper operation and maintenance activities. You will be liable for any noncompliance with applicable South Dakota environmental laws or regulations.

Our review covers works of sanitary significance and does not cover items such as quality of material, structural soundness, or electrical and mechanical design features. Approval of the plans and specifications does not in any way release the applicant from the responsibility that the project will be an operable facility when construction is completed.

If you have any questions regarding the content of this letter, please feel free to contact Paul Wegleitner, Feedlot Permit Program at (605) 773-3351. Thank you for your cooperation.

Sincerely,

Kent R. Woodmansey, PE, Engineering Manager
Feedlot Permit Program
Phone: (605) 773-3351

cc: Brad Woerner, PE, Stockwell Engineers, Inc, Yankton, SD
Luke Muller, F.D.A.L.G., Watertown, SD
Brookings County Commissioners

REQUIREMENTS

The following requirements must be implemented. Failure to implement these requirements will invalidate this approval.

State General Permit

You will be required to operate your feeding operation and manure management system in accordance with the requirements in the general permit.

1. **Environmental Training**

   Debra attended the environmental training session on December 1, 2019, and a copy of her training certificate was included with your permit application

2. **Ground Water Monitoring**

   Based on the system design, soil boring logs, and other published reports and information, this system does not appear to overlie a shallow aquifer and should not impact ground water. Therefore, a Ground Water Discharge Permit and groundwater monitoring were not required. Should the design or operation of the facility change appreciably, new hydrogeological information become available, or any contamination problems be reported, the department reserves the right to reassess the need for possible remediation, monitoring of ground water, or a Ground Water Discharge Permit. For additional information concerning ground water monitoring, please contact Troy Roth, at (605) 773-3351.

3. **Notice of Intent Form (NOI)**

   Your submitted Notice of Intent (NOI) form identifies a maximum of 4,400-head of swine weighing 55 pounds or more. The maximum number of swine to be housed at your operation includes the finisher swine to be housed in your proposed Phase 2 finisher barn that has not yet been constructed. **If for any reason you are unable to complete construction of the Phase 2 finisher barn by July 23, 2023, you will need to submit an updated NOI that identifies 2,000-head of swine and your nutrient management plan will need to be updated to be consistent with your NOI.**

4. **Composting of Animal Mortalities**

   Section 1.4.3.3.y on page 23 of the general permit indicates animal mortalities shall be handled to prevent the discharge of manure and process wastewater to surface waters of the state. Proper disposal of animal mortalities, including composting, is regulated by the South Dakota Animal Industry Board. The Animal Industry Board's animal mortality disposal protocols and regulations must be followed for the disposal of animal mortalities from your facility. For information on their requirements, please contact the Animal Industry Board at (605) 773-3321. If you plan to compost animal mortalities at your operation using manure or process wastewater in the composting process, approval of plans and specifications and coverage under the general permit for the composting structure are required.

5. **Notification**

   Other Government - You are responsible for contacting your local planning and zoning office to determine if there are any local ordinances or requirements with which you need to comply.

REQUIREMENTS CONTINUED

6. Initial Nutrient Management Plan (NMP)

Your submitted NMP indicates that manure and wastewater will be applied in the spring, summer, and fall, and that the methods of manure application will include injection and sprinkling with and without incorporation. If solid manure or process wastewater is applied to fields other than cropped fields, grass, alfalfa, pasture land, or no-till cropland, liquid manure and process wastewater must be incorporated within 24 hours and solid or semi-solid manure must be incorporated within 5 days. Additional requirements pertaining to your NMP are listed on the following pages.

A. Endangered Species Action Plan

An Endangered Species Action Plan was included with your NMP and the plan includes best management practices to follow when manure or process wastewater are land applied to fields that are within ¼ mile of a stream where Topeka shiners have been observed or have potentially occupied according to the U.S. Fish and Wildlife Service. Based on your submitted NMP, a portion of the field listed on line 3 which is identified as *"The 40"* is within ¼ mile of a stream where Topeka shiners have been observed or have potentially occupied. You need to review your Endangered Species Action Plan prior to land applying to this field.

B. Annual Soil Testing

Annual soil samples from 0 to 2 feet are required on all manure land application fields prior to manure application. The fields identified as being located over a shallow aquifer are shaded in Table 1 and have additional soil testing requirements. For these fields, soil tests are required from 0 to 2 feet and 2 to 4 feet prior to manure application.

For fields that require additional soil testing from 2 to 4 feet, you have the option to either conduct the initial 0 to 2-foot and the 2 to 4-foot soil test prior to land application or the alternative option to conduct the initial 0 to 2-foot soil test prior to land application and a second 0 to 2-foot soil test within four weeks of harvesting the crop. Please refer to section 1.4.4.3., beginning on page 35, of the 2017 general permit, for the annual nutrient management requirements. **You must notify the department in writing if you plan to use the alternative post-harvest soil sampling option under the 2017 general permit instead of the 2 to 4-foot soil sampling requirement.**

If you have not elected to conduct the alternative post-harvest soil sampling and the department determines you are not conducting the required 2 to 4-foot soil sampling prior to manure application, you will be required to conduct the alternative post-harvest soil sampling on all fields requiring the additional 2 to 4-foot soil sampling and no longer have the option of taking the additional 2 to 4-foot soil samples prior to land application.

C. Approved Land Application Fields

The fields listed in Table 1 below are approved under the 2017 general permit for the land application of manure or process wastewater. **Before manure or wastewater can be applied to these fields, you must obtain a current soil test and use the table on page 34 of the 2017 general permit to determine whether the field fits into a nitrogen need,**

REQUIREMENTS CONTINUED

one-year phosphorus crop removal, five-year phosphorus crop removal, or no application category based on the current phosphorus level of the field and the predicted annual erosion. Please refer to the table on page 34 and the annual nutrient management requirements beginning on page 35 of the 2017 general permit prior to the land application of manure to determine the proper procedure for calculating the appropriate application rate for each specific field.

Table 1: Richard & Debra Ford Swine Operation – Approved Land Application Fields

CPA-63 Line #	Field ID	County	Legal Description	Available Acres	Soil Sampling Requirements	
					0-2 feet	Additional
1	The 80	Brookings	W ½, SW ¼, Section 20, T112N, R51W	53.1	Yes	No
2	Pivot	Brookings	SE ¼, Section 35, T112N, R51W	148.4	Yes	Yes
3	The 40	Brookings	SW ¼, SW ¼, Section 36, T112N, R51W	38.3	Yes	Yes
4	Flittes	Brookings	NE ¼, Section 22, T112N, R51W	151.6	Yes	No
5	Fosters	Brookings	NE ¼, Section 14, T112N, R51W	138.5	Yes	No
6	Hibbs	Brookings	SE ¼, Sec. 8 & SW ¼, Sec. 9, T112N, R52W	235.6	Yes	No
8	Chad Pivot	Brookings	NW ¼, Section 2, T111N, R51W	126.3	Yes	Yes
9	Home	Brookings	SE ¼, Section 21, T112N, R51W	95.7	Yes	No
10	Home North	Brookings	N ½, SE ¼, Section 14, T112N, R52W	61.7	Yes	No
			Total Available Acres	**1,049.2**		

Please note in your initial NMP the estimated time it will take to build your listed fields up to 50 ppm (Olsen test) or 75 ppm (Bray-1 test) of phosphorus. You may need additional land in order to apply to your fields based on phosphorus removal at that time.

D. Land Application to Saturated, Snow-Covered, or Frozen Soil

Your submitted NMP did not include a winter application field. Item A.2.c. of your O&M guideline indicates that you do not plan for application to saturated, snow-covered, or frozen ground and accept that doing so will be a violation of the general permit even in the event of an emergency.

Incorporation to non-vegetated crop ground is required for winter application. If incorporation is not possible, winter application may only be to cropped fields, grass, alfalfa, pasture land, or no-till cropland. The general permit requires manure or process wastewater applied to non-vegetated cropland to be incorporated; liquid manure and process wastewater must be incorporated within 24 hours and solid or semi-solid manure must be incorporated within 5 days.
If you propose to add winter application fields to your NMP or change your crop rotation to allow for winter application in the future, please review items H and J below for additional information before applying to those fields.

E. Modification to Crop Rotation

Your initial NMP identifies a specific crop rotation for each field and includes a list of alternative crops that may be substituted into the rotation. If for any reason an alternative crop that is not included in the list of alternative crops is planned to be grown, that change

REQUIREMENTS CONTINUED

would be considered a major modification and would require a revised alternative crop list to be submitted to the department for review and approval.

F. Certified Soil and Manure Testing Laboratories

As part of your annual nutrient management planning requirements, soil and manure tests must be analyzed by certified soil testing and manure testing labs. The laboratory analyzing the soil samples must be accredited by the **North American Proficiency Testing Programs' Proficiency Assessment Program** and the labs that are currently accredited are listed on the following website: http://www.naptprogram.org/pap. The laboratory analyzing the manure or process wastewater must be certified by the **Manure Testing Laboratory Certification Program** and the manure testing labs that are currently certified are listed on the following website: http://www2.mda.state.mn.us/webapp/lis/manurelabs.jsp.

If you or your crop consultant sends your soil or manure samples to a lab that is not listed on either of these websites, you and/or crop consultant may want to tell them that you need to use a certified lab so they can become certified.

G. Field Addition Requirements

To add fields to your approved NMP, you must submit the required information for each additional field to the department for our review and approval. Information on adding fields to your approved NMP may be obtained from your local Natural Resources Conservation Service (NRCS) office. You may also contact us for assistance at (605) 773-3351, or visit our website at http://denr.sd.gov/des/fp/FieldAdditions.aspx for instructions on adding fields to your NMP. **You cannot apply manure to any fields not included in your approved NMP.**

H. Mobile Land Application Systems

If a mobile land application system using temporary piping will be used for the land application of liquid manure or process wastewater, the equipment must be equipped with an on-board radio controller and flow meter that can be overseen by the applicator. See Section 1.4.4.1.m. on page 30 of the 2017 general permit for more information on this requirement.

7. Setback Distance and Water Wells

The manure management system and the application sites must be located at least 100 feet from a private well owned by you if the top of the aquifer is 100 feet or more below the land surface, 150 feet from a private well owned by you if the top of the aquifer is less than 100 feet below the land surface, 250 feet from a private well not owned by you and 1,000 feet from any public supply well. These areas cannot be included in the land application areas.

8. Other Permit(s) That Will or May Be Required

Storm Water Permit - If the construction associated with your Phase 2 finisher barn will disturb more than one acre in total land area, **you must obtain a general storm water construction permit prior to beginning construction.** This permit must be obtained before you can start

REQUIREMENTS CONTINUED

constructing your proposed manure management system. Information concerning this permit can be obtained by calling the Surface Water Quality Program at 1-800-737-8676. **A copy of this plan must be kept on-site during construction for review by DENR inspectors.**

Emergency Power Generator - The department has observed that emergency power generators have been installed at similar sized operations. If an emergency power generator will be installed at your operation it may require that you obtain an air quality permit. Please contact Kristen Hendricks with the department's Air Quality Program at (605) 773-3151, to determine whether an air quality permit is required. If an air quality permit is required, you must have that permit prior to using the generator.

Permit to Occupy Right of Way - If manure application will involve placing hoses or other equipment in a state highway right of way (for example, in a road ditch or through a culvert), you must first obtain a Permit to Occupy Right of Way. Application for this permit may be made through the local South Dakota Department of Transportation area office. Contact your local SD DOT area office for more information on this permit. In addition, please contact your county highway superintendent to determine if your county has similar requirements.