NRG Meteorological Tower Used by Iberdrola Renewables
- Standard Marking Convention -

Image depicts one side of a tower (out of four), with guy wires, sensor booms, and aircraft marker balls.

-Alternating orange and white paint, upper third of tower

-2 sets of aircraft marker balls (top is 90 feet down the wire from the tower)

-Guy guards on all wires, second set on outer wires

Aircraft Marker Ball
(8 on a complete tower)

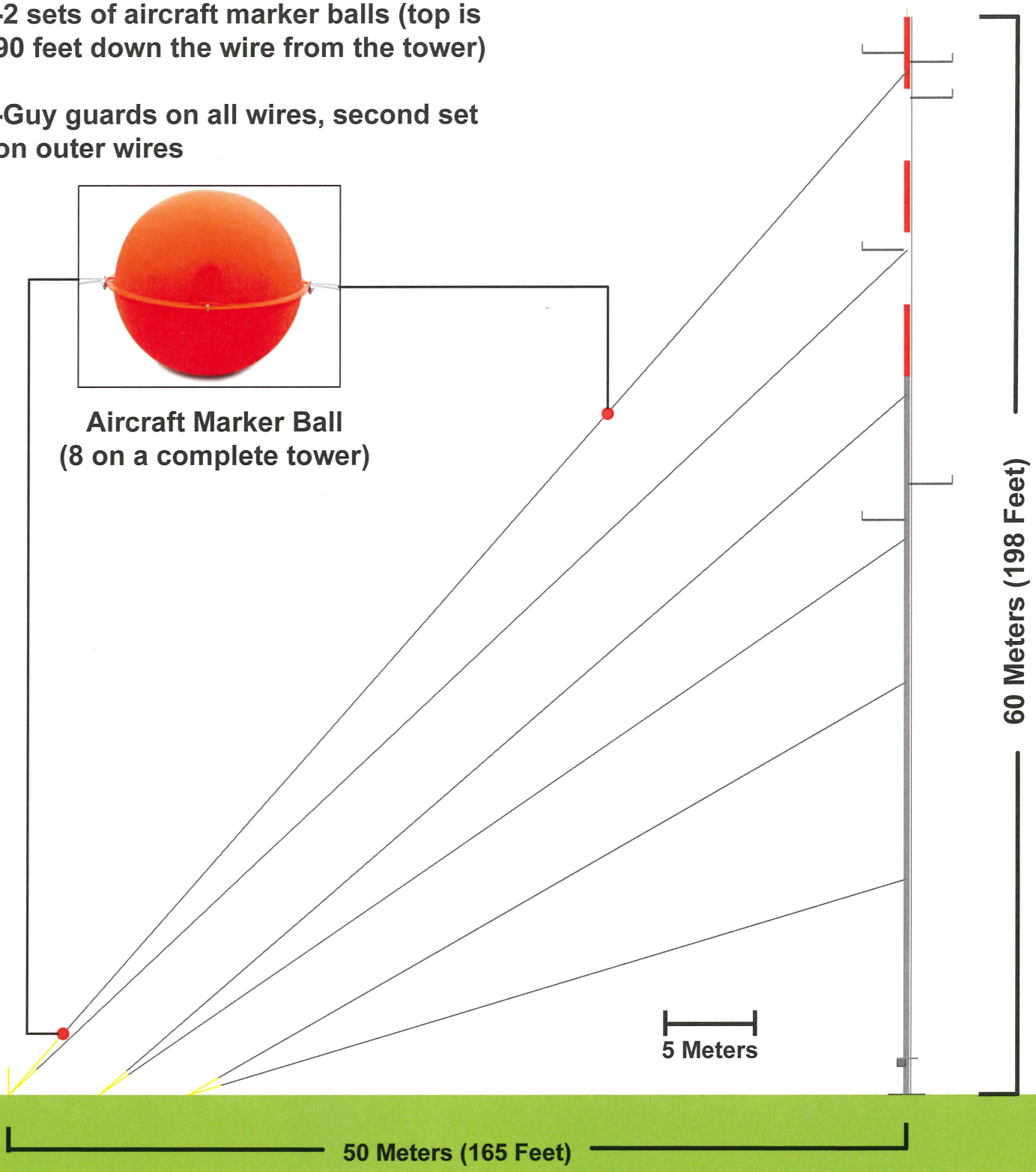

REV2 3/15

Typical Wind Monitoring Site

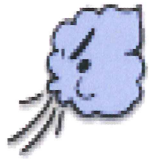

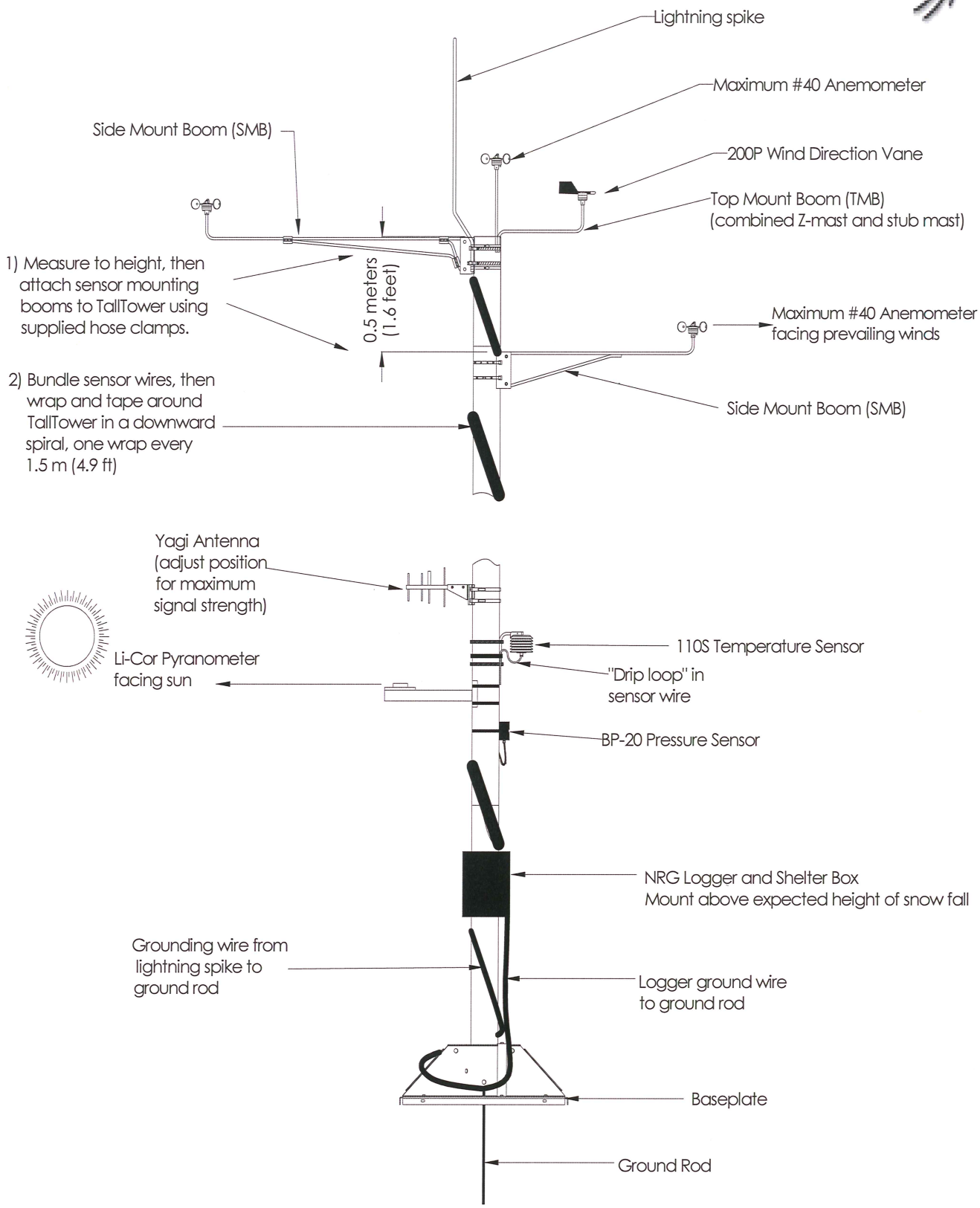

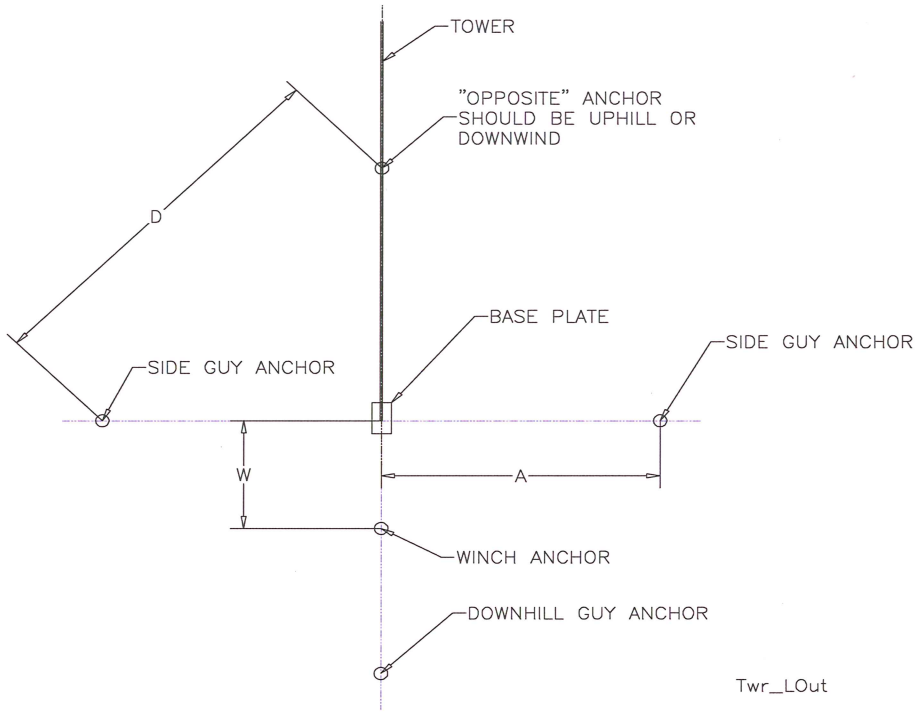

Figure 1: Tower Site Layout

Tower	Dimensions		
	A	D	W
10 m	4.9 m (16 feet)	6.9 m (22.6 feet)	N/A
20 m	12.8 m (42 feet)	18.1 m (59.4 feet)	6.1 m (20 feet)
30 m, 30 m HD, 30 m SHD	18.3 m (60 feet)	25.9 m (84.9 feet)	9.1 m (30 feet)
40 m, 40 m HD (Inner Guy Point)*	21.3 m (70 feet)	30.2 m (99 feet)	9.1 m (30 feet)*
40 m, 40 m HD (Outer Guy Point)*	22.9 m (75 feet)	32.3 m (106 feet)	9.1 m (30 feet)*
50 m, 50 m HD (Inner Guy Point)*	30.5 m (100 feet)	43.1 m (141.4 feet)	12.2 m (40 feet)*
50 m, 50 m HD (Outer Guy Point)*	33.5 m (110 feet)	47.4 m (155.6 feet)	12.2 m (40 feet)*
60 m (Inner Guy Point)♦	38.1 m (125 feet)	53.9 m (176.8 feet)	14.6 m (48 feet)*
*60 m (Middle Guy Point)♦	44.5 m (146 feet)	63 m (206.5 feet)	14.6 m (48 feet)*
60 m (Outer Guy Point)♦	50.8 m (166.6 feet)	71.9 m (235.7 feet)	14.6 m (48 feet)*

Table 1: Tower and Anchor Layout Dimensions

***40 meter and 50 meter towers have two anchors per side and two winch anchors.**

♦ 60 meter tower has three anchors per side and two winch anchors.

NOTE: The winch anchor must be in line with the tower. It is very important that the distance from the base plate to the winch anchor (dimension W in Table 1) be exact. See **Figure 2.**

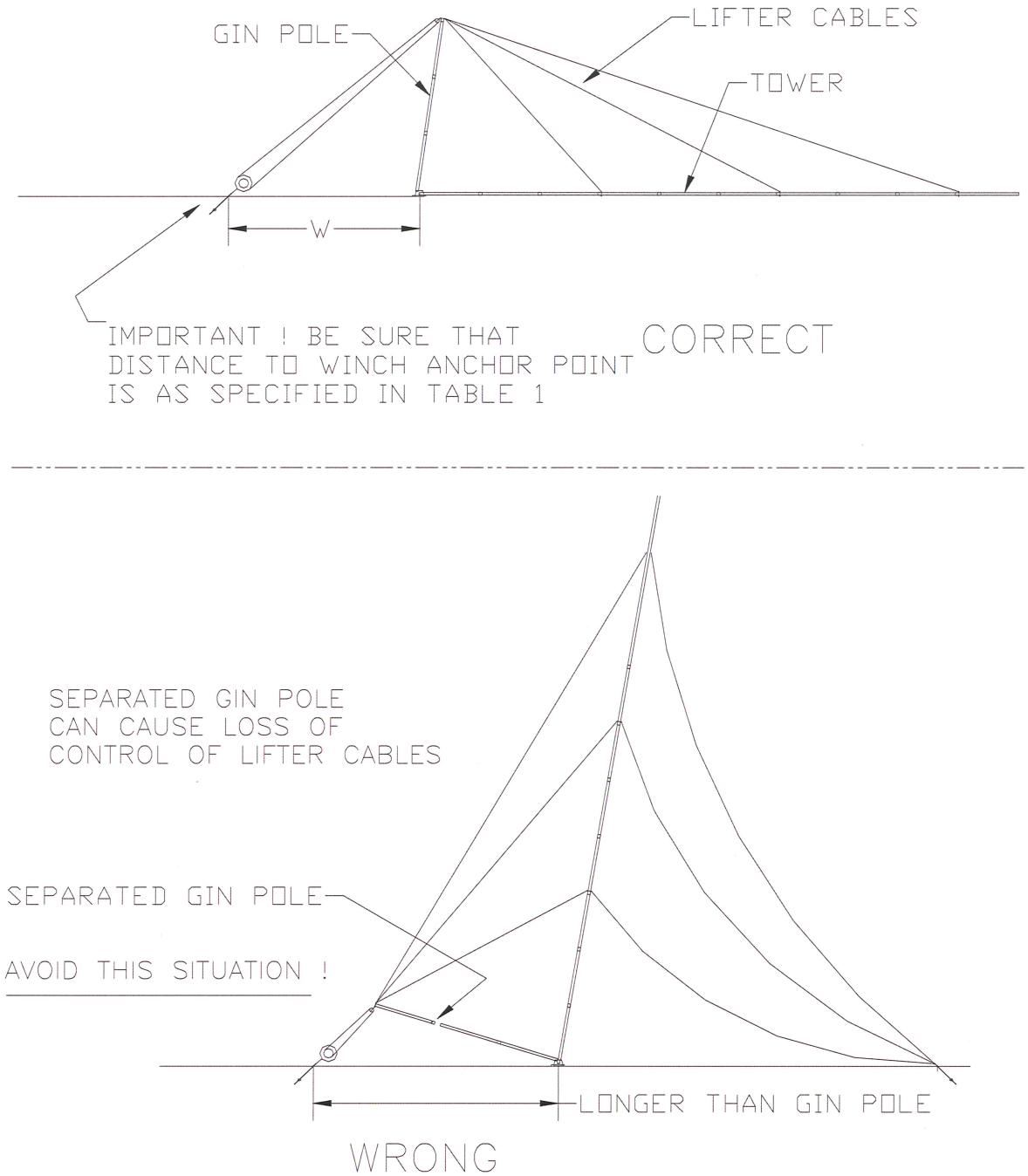

Figure 2: Winch Anchor Placement

NOTE: The gin pole safety wire **MUST** be used to prevent gin pole separation.

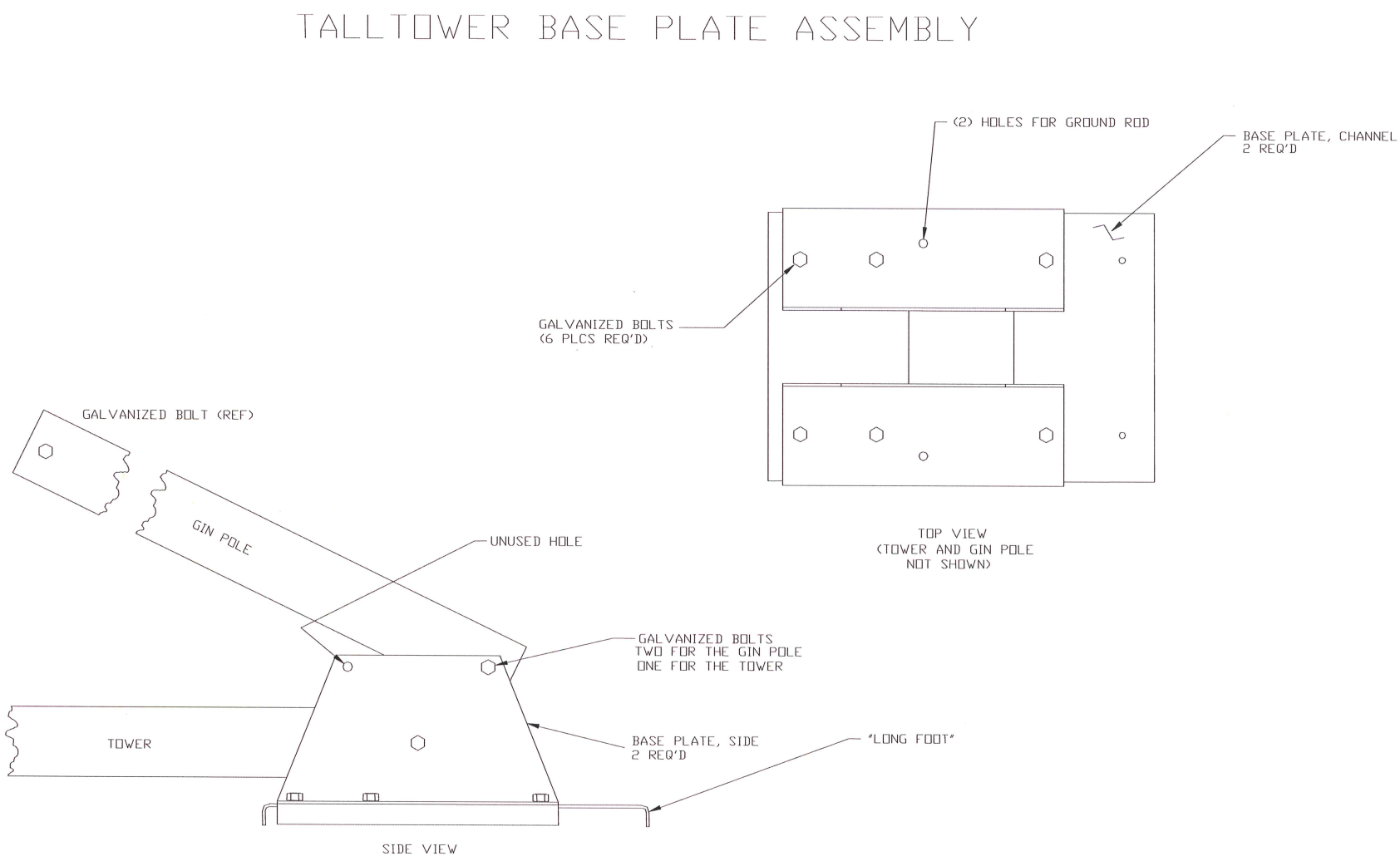

Figure 3: TallTower Base Plate Assembly (for 3.5 inch dia. towers)

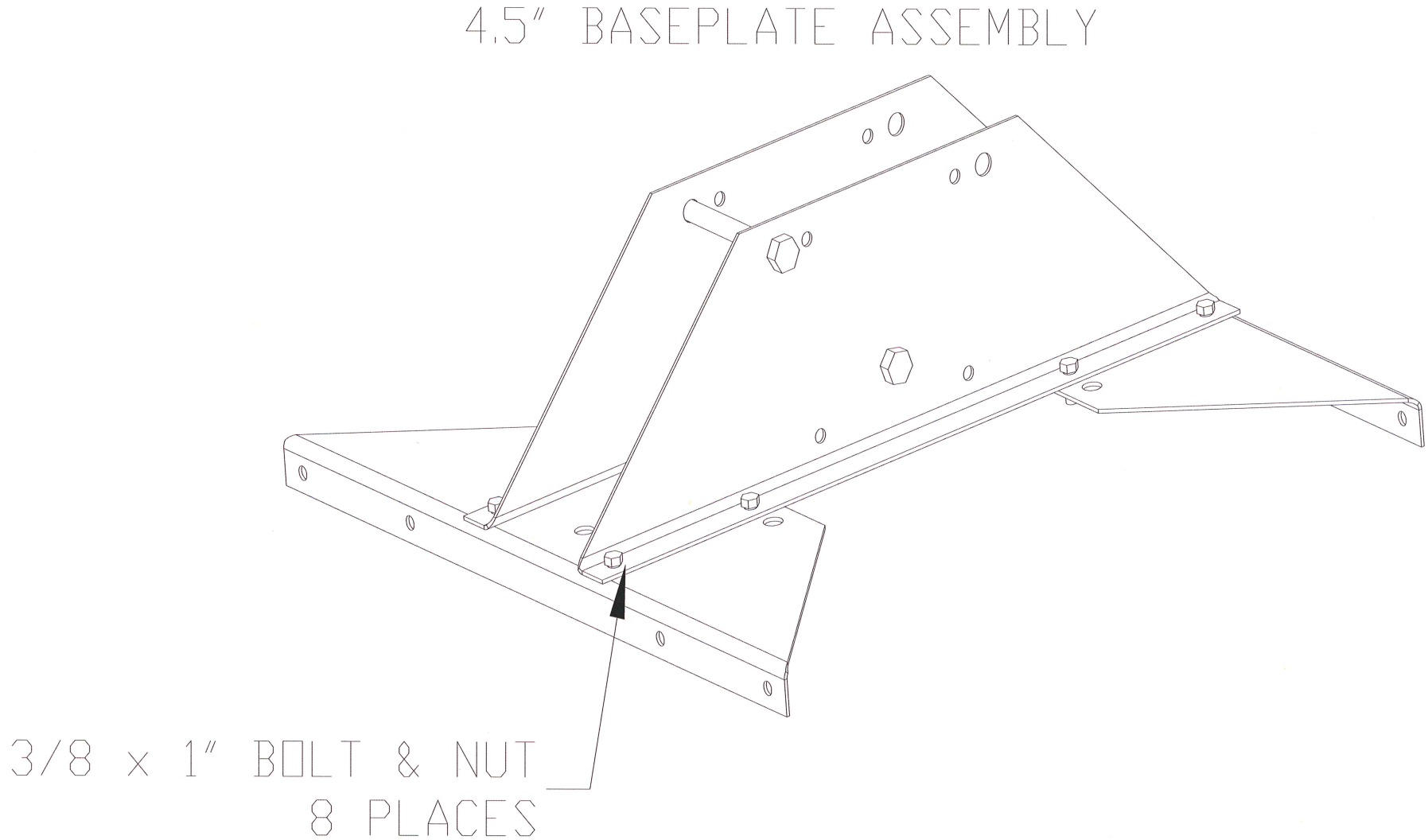

Figure 4: TallTower Base Plate Assembly (for 4.5 inch dia. towers)

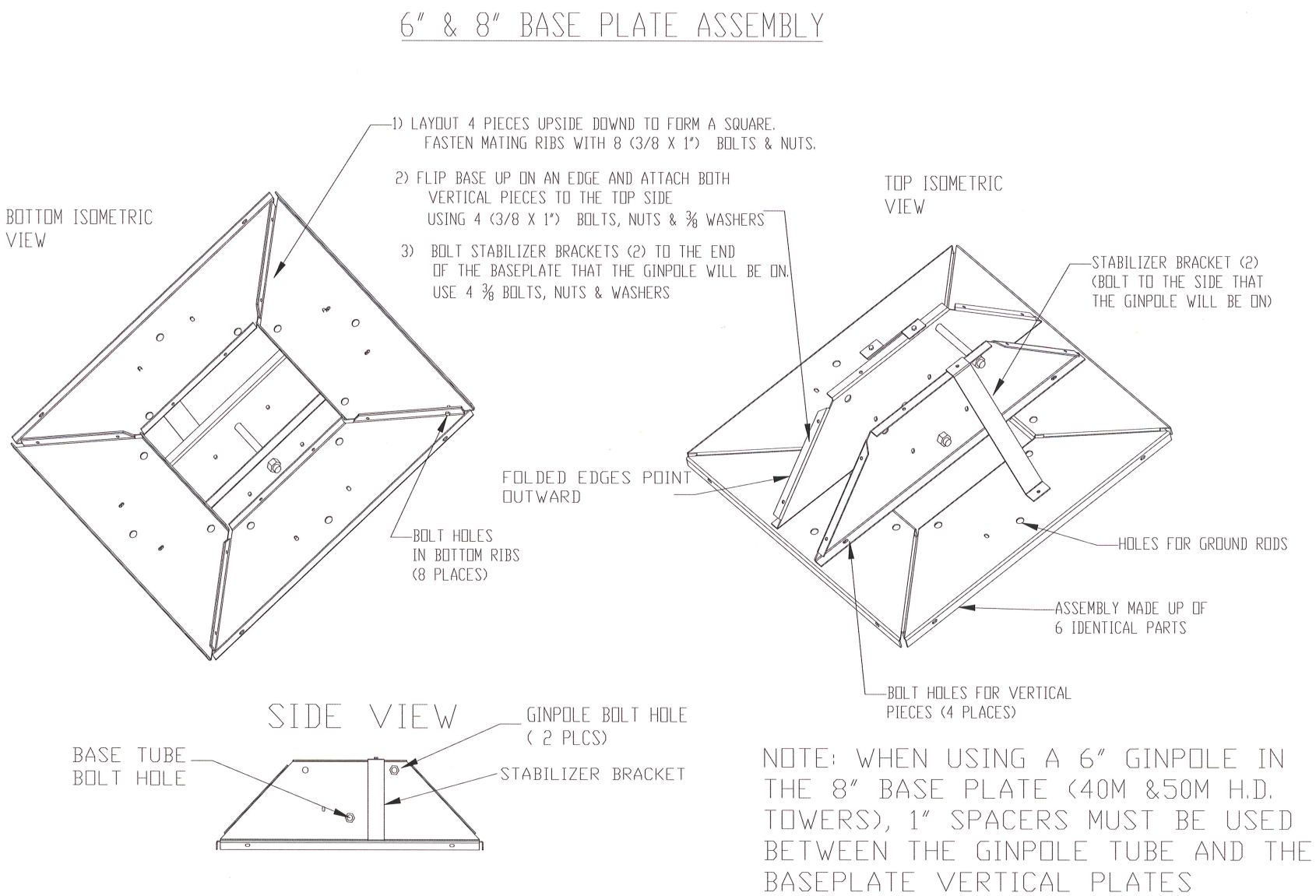

Figure 5: TallTower Base Plate Assembly (for 6 inch and 8 inch dia. towers)

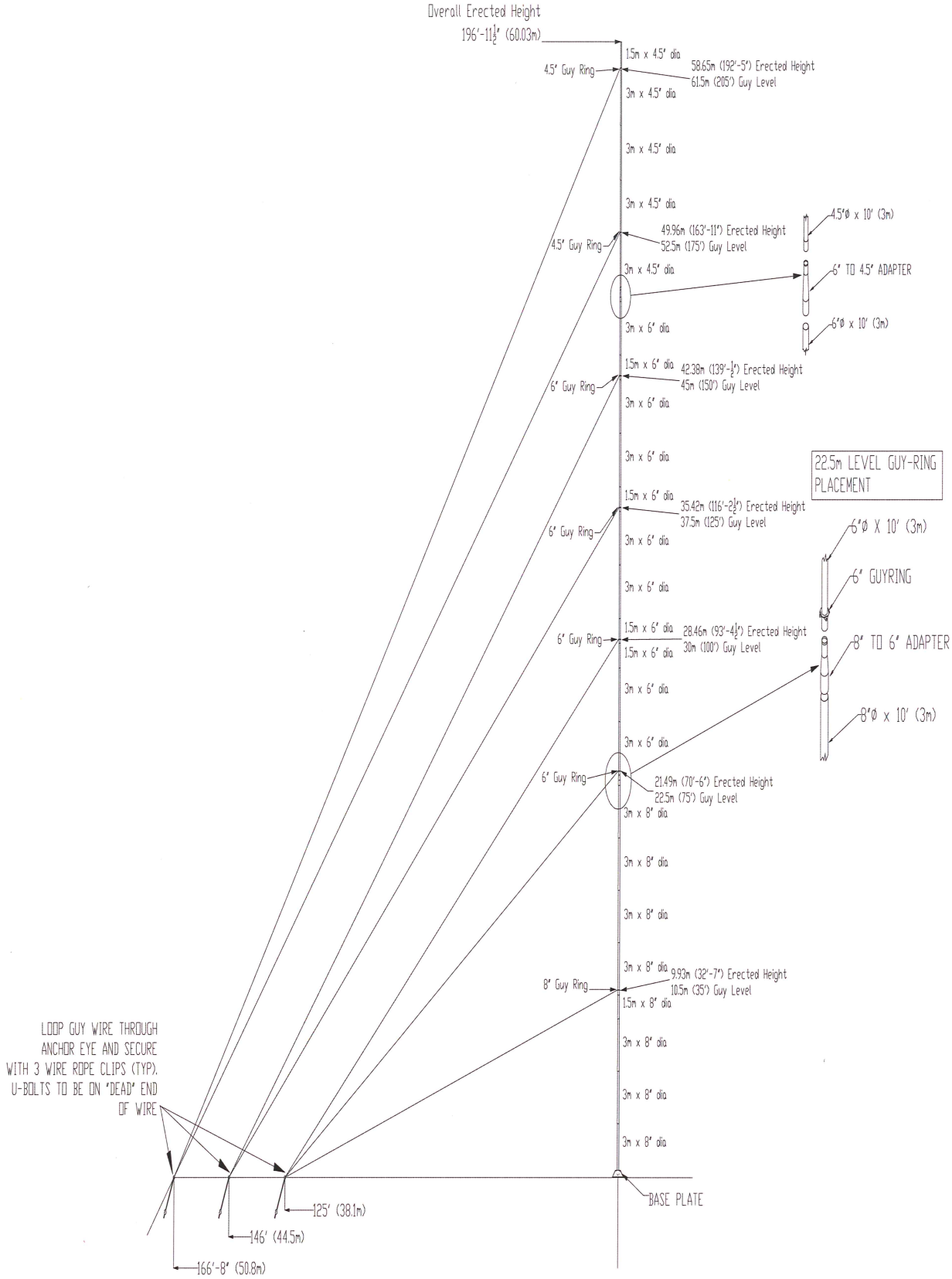

Figure 15: 60 m TallTower Assembly

Appendix A: Anchoring Guidelines

Before the tower is ordered, the soil type should be determined and the correct anchors ordered. The purpose of this section is to give you the information needed to provide suitable anchoring for your TallTower. **Because anchor requirements are site specific, it remains the responsibility of the customer to determine anchor requirements. If you are not sure what is required, seek professional guidance.** Local utility companies can often provide useful information regarding anchoring used in the site area.

The choice of anchors must take into consideration soil type, maximum winds to be experienced, icing or other weather that may affect the tower, and a safety factor suitable for the location and to meet any legal requirements.

Considerations include but are not limited to: tornadoes, hurricanes or typhoons, locations where very high winds are expected, periodic soaking of the soil which may shift or become undermined, and icing events.

Table 3 lists the maximum anchor loads for each tower at the maximum rated wind speed. Anchors must be placed at the correct angle to provide specified holding power and to prevent shifting of the anchors under load.

Table 3: Upwind Anchor Loads

Tower size	Tube diameter	EIA-222-F wind velocity (a)	Guy anchor reaction (b)	Winch anchor reaction (c)
30 m	114 mm (4.5 inches)	31.3 m/s (70 mph)	6200 N (1400 pounds) at 45°	5300 N (1200 pounds) at 45°
30 m HD	152 mm (6 inches)	31.3 m/s (70 mph)	7100 N (1600 pounds) at 45°	7100 N (1600 pounds) at 45°
30 m SHD	203 mm (8 inches)	31.3 m/s (70 mph)	8900 N (2000 pounds) at 45°	9800 N (2200 pounds) at 45°
40 m	152 mm (6 inches)	31.3 m/s (70 mph)	8500 N (1900 pounds) at 51°	12500 N (2800 pounds) at 45°
40 m HD	203 mm (8 inches)	31.3 m/s (70 mph)	9800 N (2200 pounds) at 51°	16500 N (3700 pounds) at 45°
50 m	152 mm (6 inches)	31.3 m/s (70 mph)	10200 N (2300 pounds) at 49°	14200 N (3200 pounds) at 45°
50 m HD	203 mm (8 inches)	31.3 m/s (70 mph)	10700 N (2400 pounds) at 49°	18700 N (4200 pounds) at 45°
60 m	114, 152, 203 mm (4.5, 6, 8 inches)	31.3 m/s (70 mph)	8900 N (2000 pounds) at 45°	20500 N (4600 pounds) at 45°

NOTES:
(a) Fastest mile wind velocity per EIA-222-F at 10 meters (33 ft) above ground level
(b) Maximum guy anchor reaction vector opposing the guy wires. Angle below horizontal.
(c) Maximum force on the winch anchor during erection

Screw-In Anchors

Screw-in anchors are the most commonly used anchors for normal clay soils without rocks. They are installed by hand, using a cross bar to screw them into the earth like a corkscrew.

Screw-in anchors can also used to provide the anchoring rod and eye for site-built anchors, such as concrete. Refer to the information on concrete anchors below.

150 mm (6.0 inches) screw-in anchors are the standard anchors supplied with NRG TallTowers.

Table 4: Specifications for Screw-In Anchors

	150 mm (6 inches) Anchor
Helix diameter:	152 mm (6.0 inches)
Length Overall:	1.65 m (66 inches)
Rod diameter:	19 mm (0.75 inches)
Material:	Galvanized steel
Holding Power: (These anchors are not suitable for soils denser than class 5.)	
Class 5 soils *	3,000 kg (6,500 pounds)
Class 6 soils *	2,300 kg (5,000 pounds)
Class 7 soils *	1,100 kg (2,500 pounds)

* Consult the Soil Classes chart, **Table 5**.

** In class 7 soils, it is advisable to place anchors deep enough to penetrate to underlying class 5 or 6 soil.

Table 5: Soil Classes

Class	Common Soil Types	Geological Soil Classification
3	Dense clays, sands and gravel; hard silts and clays	Glacial till; weathered shales, schist, gneiss and siltstone
4	Medium dense sandy gravel; very stiff to hard silts and clays	Glacial till; hardpan; marls
5	Medium dense coarse sand and sandy gravels; stiff to very stiff silts and clays	Saprolites, residual soils
6	Loose to medium dense fine to coarse sand; firm to stiff clays and silts	Dense hydraulic fill; compacted fill; residual soils
7**	Loose fine sand; Alluvium; loess; soil-firm clays; varied clays; fill	Flood plain soils; lake clays; adobe; gumbo; fill

Reproduced by permission, The A. B. Chance Co.

Arrowhead Anchors

Arrowhead anchors can penetrate stiff and rocky soils because the unique triangular design tends to thread its way between obstacles such as rocks, which can prevent successful installation of screw-in anchors. Arrowhead anchors are driven into the ground with a hardened steel drive rod. Once in the ground, upward force on the attached cable rotates the anchor perpendicular to the cable for maximum holding power.

Table 6: Specifications for Arrowhead Anchors

Length Overall:	1.22 m (48.0 inches).
Arrowhead Length:	203 mm (8.0 inches)
Materials:	6.35 mm (0.25 inches) galvanized (7x19) steel cable; breaking strength - 1905 kg (4200 pounds); with malleable iron head.
Holding Power:	
Class 3 soils *	1905 kg (4200 pounds)
Class 4 soils *	1361 kg (3000 pounds)
Class 5 soils *	907 kg (2000 pounds)
Class 6 soils *	544 kg (1200 pounds)
Class 7 soils *	272 kg (600 pounds)

* See **Table 5** for soil class descriptions

Rock Anchors

Rock anchors are placed into solid rock, when anchoring to either bare rock, or thin soils with solid rock near the surface. They are constructed of a threaded rod with integral eye, and two opposing wedge halves. The anchor is placed in a hole pre-drilled in the rock. Twisting the eye of the anchor forces the wedges against the sides of the hole, locking the anchor in place. Load actually increases the wedging force, developing holding power equal to the full tensile strength of the rod.

Table 7: Specifications for Rock Anchors

Holding Power:	9072 kgf (20,000 pounds)
Rod Length Overall:	0.38 m (15 inches), 0.76 m (30 inches) or 1.35 m (53 inches), other lengths available
Anchor Diameter:	44 mm (1.75 inches) as supplied, 60 mm (2.375 inches) max. expanded
Rod Diameter:	19 mm (.75 inches)
Materials:	Malleable iron, dipped in rust-resisting black paint
Required Hole Size:	50 mm (2 inches) diameter (nominal)
Use Rock Drill Size:	50 mm (2 inches) diameter

Table 8: NRG TALL TOWERS DESIGN LOADS

Tower size	Tube diameter	EIA-222-F wind velocity	Vertical base reaction (a)	Guy anchor reaction (b)	Winch anchor reaction (c)
30 m	114 mm (4.5 inches)	31.3 m/s (70 mph)	12500 N (2800 pounds)	6200 N (1400 pounds) @ 45	5300 N (1200 pounds) @ 45
30 m HD	152 mm (6 inches)	31.3 m/s (70 mph)	13300 N (3000 pounds)	7100 N (1600 pounds) @ 45	7100 N (1600 pounds) @ 45
30 m SHD	203 mm (8 inches)	31.3 m/s (70 mph)	14700 N (3300 pounds)	8900 N (2000 pounds) @ 45	9800 N (2200 pounds) @ 45
40 m	152 mm (6 inches)	31.3 m/s (70 mph)	19100 N (4300 pounds)	8500 N (1900 pounds) @ 51	12500 N (2800 pounds) @ 45
40 m HD	203 mm (8 inches)	31.3 m/s (70 mph)	20500 N (4600 pounds)	9800 N (2200 pounds) @ 51	16500 N (3700 pounds) @ 45
50 m	152 mm (6 inches)	31.3 m/s (70 mph)	26700 N (6000 pounds)	10200 N (2300 pounds) @ 49	14200 N (3200 pounds) @ 45
50 m HD	203 mm (8 inches)	31.3 m/s (70 mph)	28000 N (6300 pounds)	10700 N (2400 pounds) @ 49	18700 N (4200 pounds) @ 45
60 m	114, 152, 203 mm (4.5, 6, 8 inches)	31.3 m/s (70 mph)	32500 N (7300 pounds)	8900 N (2000 pounds) @ 45	20500 N (4600 pounds) @ 45

Notes:

Fastest mile wind velocity per EIA-222-F at 10 meters (33 feet) above ground level.

a) Vertical base reaction. The maximum horizontal reaction is equal to horizontal component of winch anchor reaction.

b) Maximum guy anchor reaction vector opposing the guy wires. Angle below horizontal.

c) Maximum force on the winch anchor during tower erection.

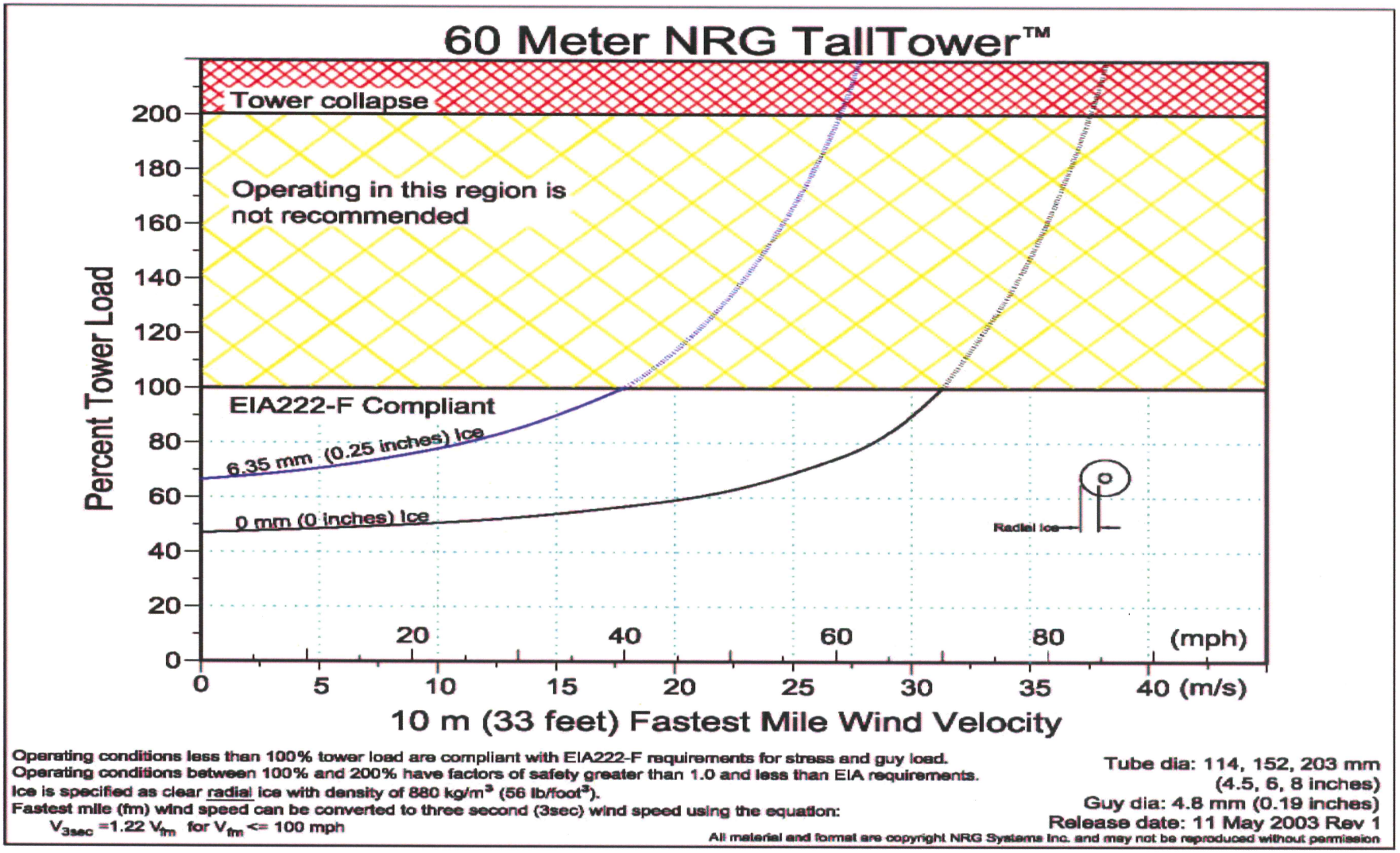

Figure 36: Tower Load and Performance Chart: 60 m TallTower

Materials	Outer Diameter	Wall Thickness	Description	Yield Strength	Breaking Strength	Corrosion Protection
1	8 inch	0.109 inch	MT 1020	50.0 ksi	N/A	Hot Dipped Galvanized ASTM 653
	203 mm	2.8 mm		345 mPa		
2	8-6 inch taper	0.109 inch	MT 1020	50.0 ksi	N/A	
	203-152 mm	2.8 mm		345 mPa		
3	6 inch	0.109 inch	MT 1015	50.0 ksi	N/A	
	152 mm	2.8 mm		345 mPa		
4	6-4.5 inch taper	0.109 inch	MT 1015	50.0 ksi	N/A	
	152-114 mm	2.8 mm		345 mPa		
5	4.5 inch	0.083 inch	MT 1010	50.0 ksi	N/A	
	114 mm	2.1 mm		345 mPa		
6	0.187 inch		7x7 Galv.	N/A	3.7 kLb	Galvanized
	4.76 mm		Aircraft		15.2 kN	

Reactions and member forces	Imperial	SI
10 m (33 feet) wind velocity (Fastest mile)	70 mph	31.3 m/s
Top of tower wind velocity (Fastest mile)	90 mph	40.4 m/s
Radial ice thickness	0.0 inch	0 mm
Inner guy anchor force	1.5 kLb	5.9 kN
Inner guy anchor force (angle from horizontal)	26°	26°
Middle guy anchor force	1.3 kLb	5.1 kN
Middle guy anchor force (angle from horizontal)	40°	40°
Outer guy anchor force	2.0 kLb	8.0 kN
Outer guy anchor force (angle from horizontal)	45°	45°
Tower base force (horizontal- during erection)	3.3 kLb	13.4 kN
Tower base force (vertical)	7.3 kLb	30.0 kN
Erection anchor force	4.6 kLb	18.9 kN
Erection anchor force (angle from horizontal)	45°	45°
Maximum guy tension	0.9 kLb	3.5 kN
Maximum tower tube stress (compression)	11.4 ksi	78.8 mPa
Maximum tower tube stress (tension)	8.7 ksi	60.2 mPa
Maximum top deflection	13 inch	320 mm
Initial guy tension	0.2 kLb	0.7 kN

REVISIONS			
REV	DESCRIPTION	DATE	APPROVED
1	Units, notes update	16Jul03	APB
2	Changed reaction format	17Aug03	APB

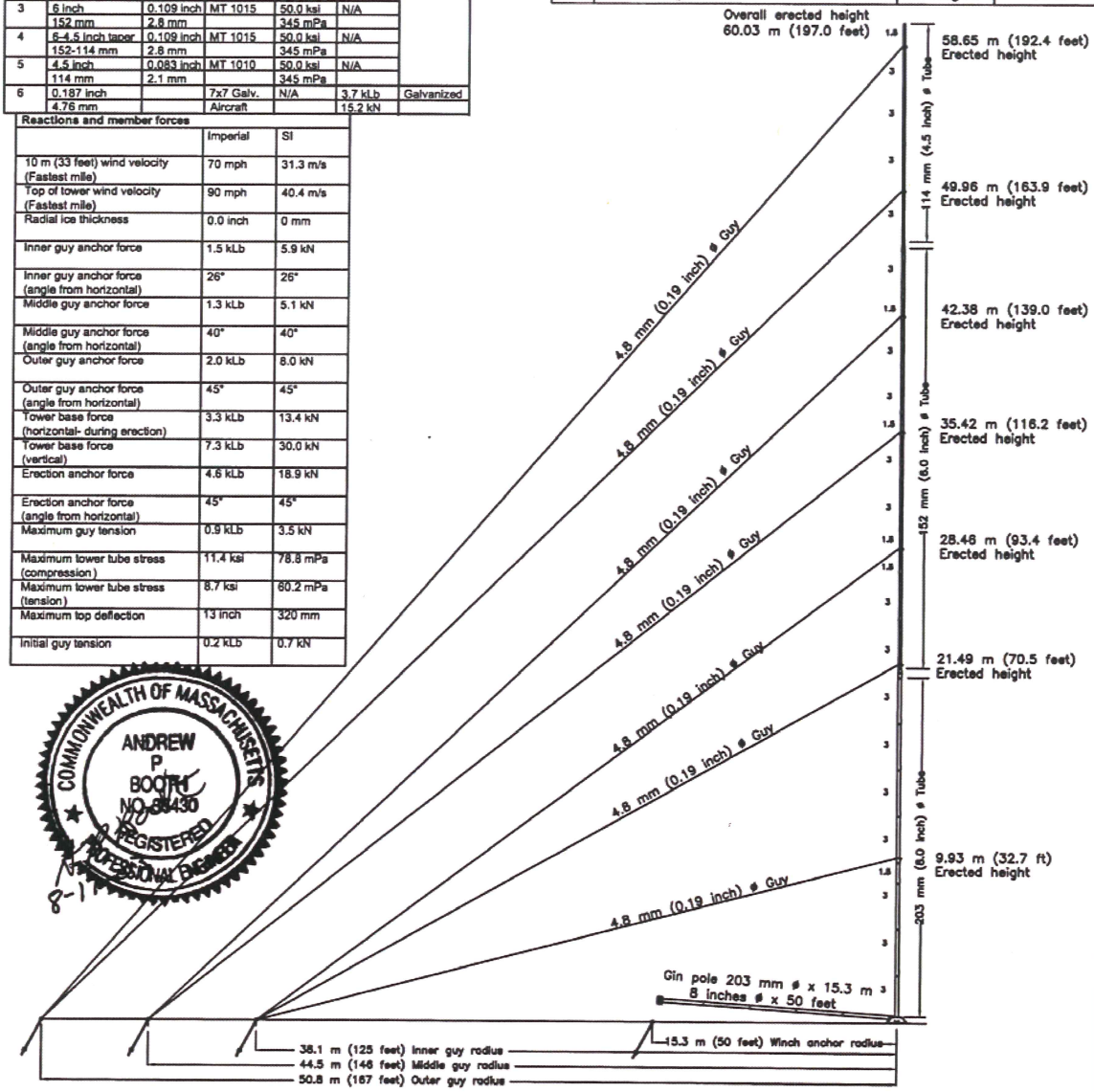

COMMONWEALTH OF MASSACHUSETTS
ANDREW P. BOOTH
NO. 38430
REGISTERED PROFESSIONAL ENGINEER
8-1

Notes

A) Wind forces and allowable member loads are calculated using ANSI TIA/EIA-222-F, (1996), "Structural Standards for Steel Antenna Towers and Antenna Supporting Structures".
B) Wind speeds are fastest mile wind velocity per EIA-222-F. EIA-222-F wind loading coefficients: Gf=1.69, Cf=1.0, α =2/7.
C) Fastest mile (fm) wind speed can be approximately converted to three second (3sec) wind speed using the equation:
V(3sec) =1.22 V(fm) for V(fm) <= 100 mph
D) Guy joint efficiency = 0.9 and the guy safety factor is greater than or equal to 2.0.
E) An ANSYS large deflection FEA model using beam (Pipe16) and tension (Link10) elements with distributed wind load was used to calculate member forces and reactions.
F) Tower allowable stress design per American Institute of Steel Construction (AISC) "Allowable Stress Design", 9th Ed. 1989. Chapter H, equations H1-1, H1-2
G) This tower design meets the structural requirements of EIA-222-F, sections 1,2,3,6,8 for the given loading condition. This analysis does not apply to EIA-222-F sections 7,11,12,13.
H) Foundation design must be considered separately and is not a part of this analysis. Specific foundation details must be approved for the specific application and site by a qualified professional.
I) A locally qualified professional must determine the applicability of this analysis for the expected site conditions. Due to the lack of involvement in the siting or construction phase of this product at a specific location, liability is strictly limited to issues arising from negligence or willful misconduct by NRG or the professional engineer completing this analysis. No warranty, expressed or implied, is made concerning the suitability of this product for a given application or location.

Units notation

mm - Millimeters
m - Meters
m/s - Meters per second
kN - 1,000 Newtons
mPa - 1,000,000 Pascals
kLb - 1,000 US pounds
ksi - 1,000 US pounds per inch²
mph - Miles per hour
Ø - Diameter

UNLESS OTHERWISE SPECIFIED DIMENSIONS ARE IN INCHES TOLERANCES ARE:
FRACTIONS ± 1/64 DECIMALS .XX ± .015 .XXX ± .005 ANGLES ± 1°
DO NOT SCALE DRAWING

MATERIAL :
FINISH :

THE INFORMATION CONTAINED HEREIN IS THE PROPERTY OF NRG SYSTEMS INC., AND MUST BE MAINTAINED IN CONFIDENCE. NO PORTION OF THE DRAWING MAY BE REPRODUCED OR USED WITHOUT THE EXPRESS PERMISSION OF THE COMPANY

APPROVALS	DATE
DRAWN A Booth	26Apr03
CHECKED	
ISSUED	

NRG SYSTEMS INC
110 COMMERCE STREET, HINESBURG, VT., 05461

TITLE 60 Meter TallTower
203,153,114 mm
(8.0, 6.0, 4.5 inch) diameter tube

SIZE B DWG.NO. TT2885 REV 0
SCALE SHEET 3

Figure 49: 60 m TallTower